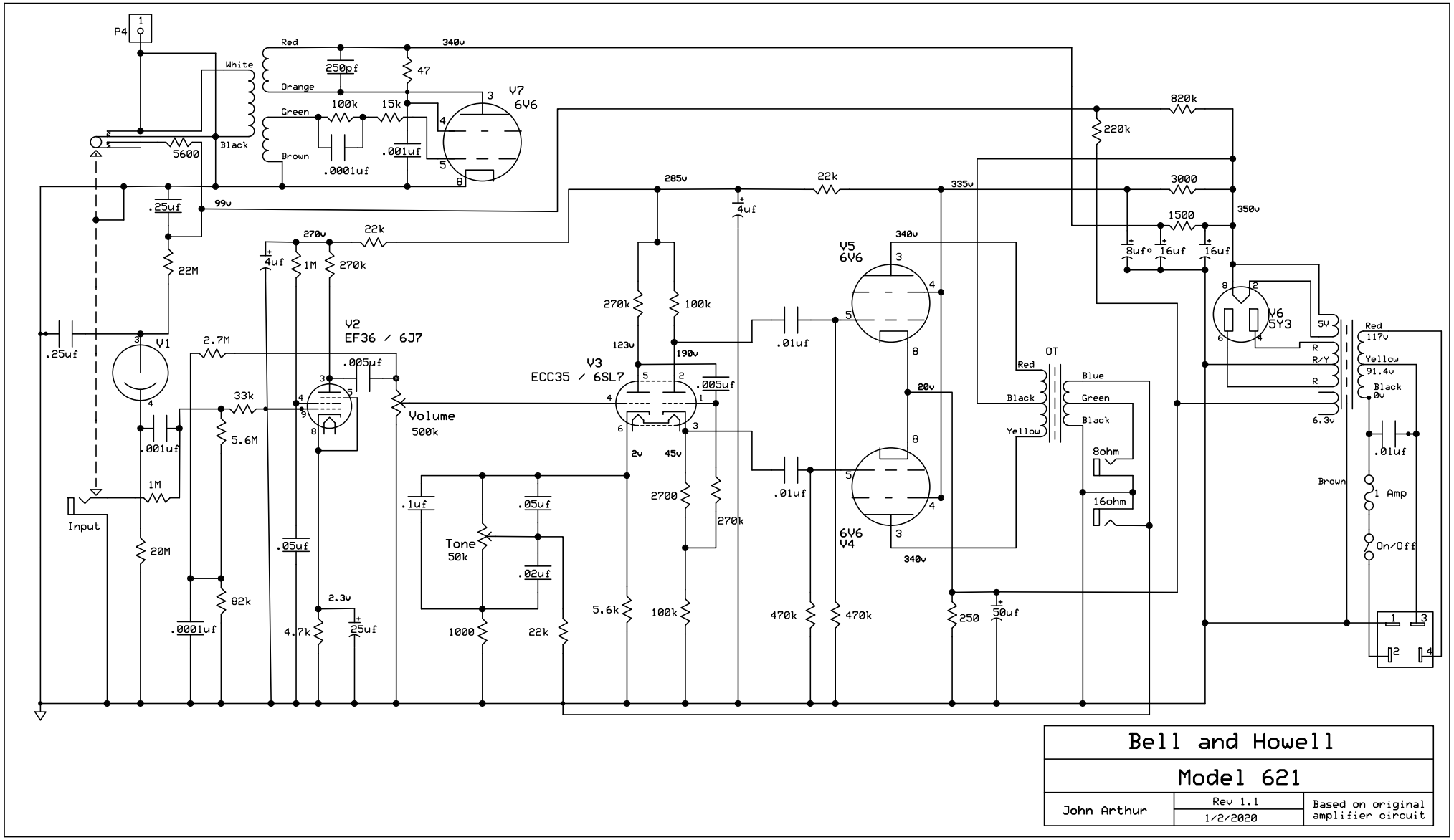

Bell and Howell		
Model 621		
John Arthur	Rev 1.1 1/2/2020	Based on original amplifier circuit

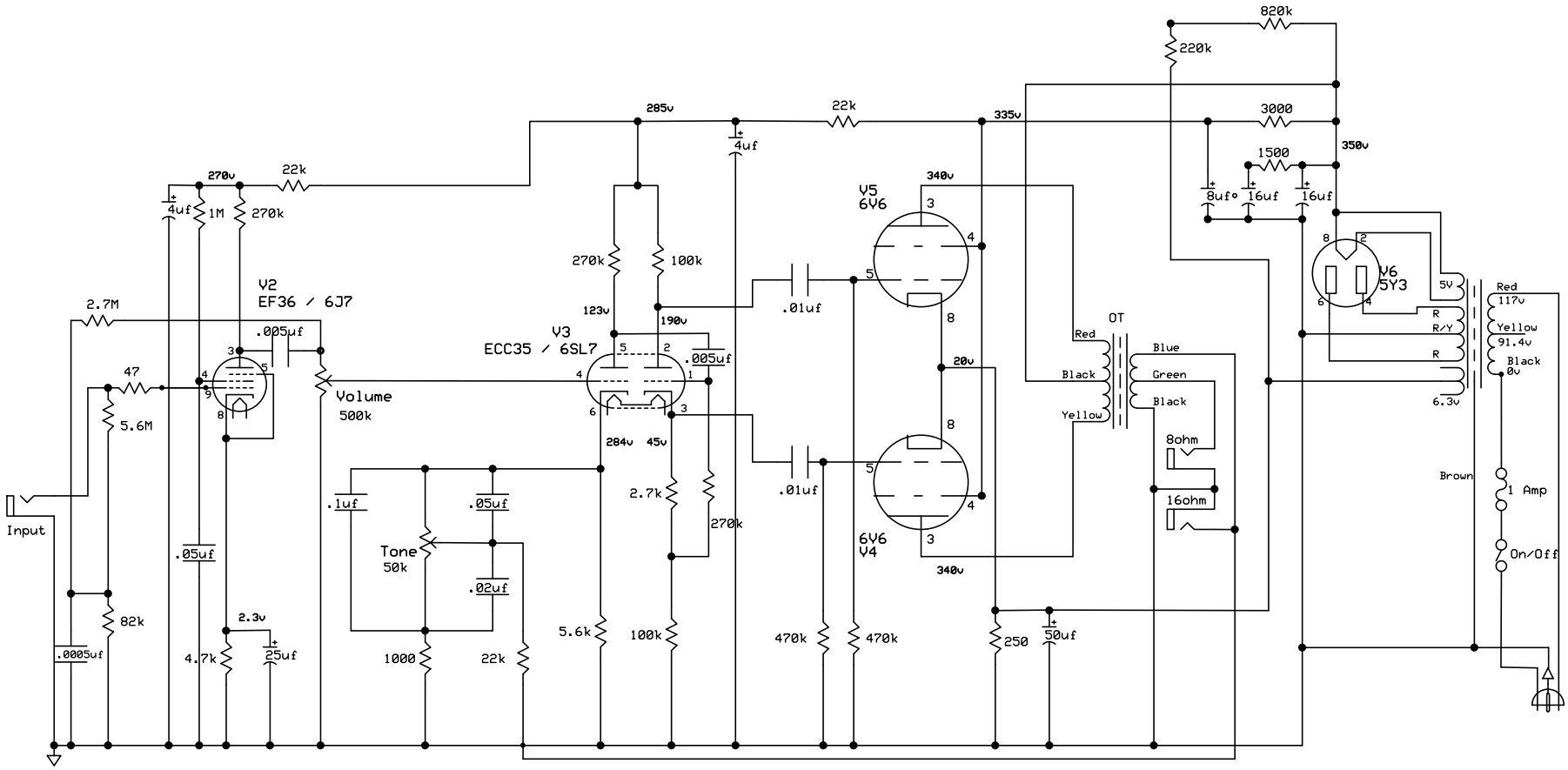

Bell and Howell		
Altered Model 621		
John Arthur	Rev 1.1 1/2/2021	Based on original Model 621