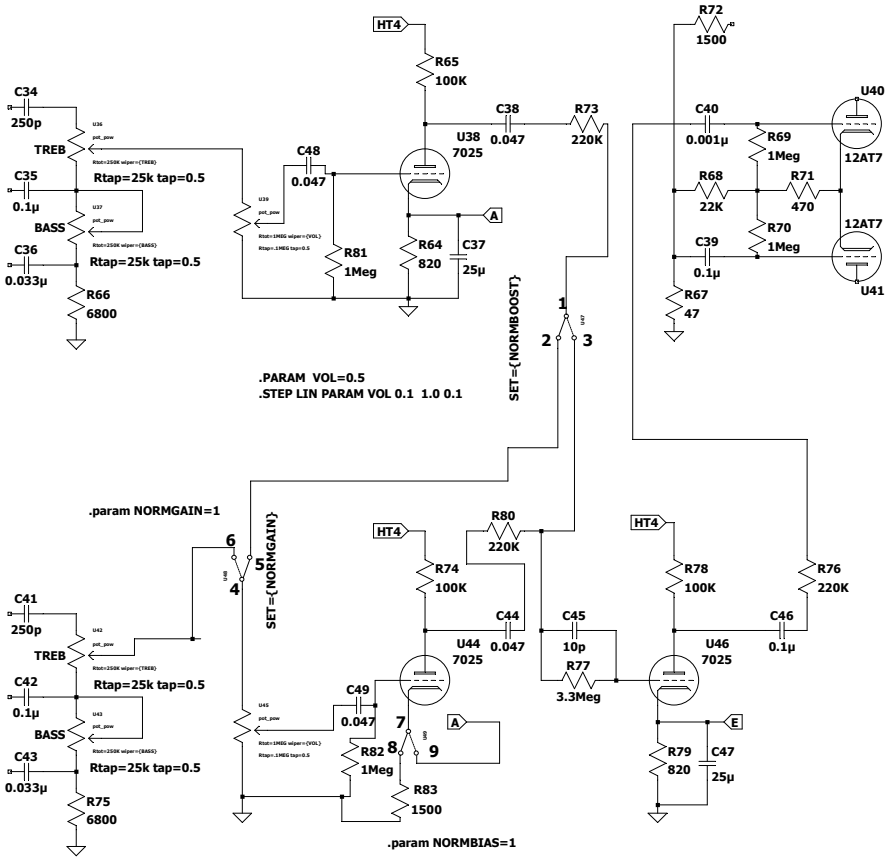

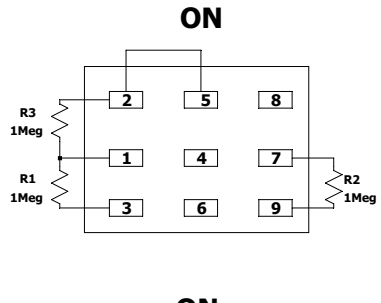

TPDT Switch

C:\Users\takins\Documents\LTspice\Deluxe_LTSpice\Deluxe\Fender Deluxe AB763-Custom-Switching.asc