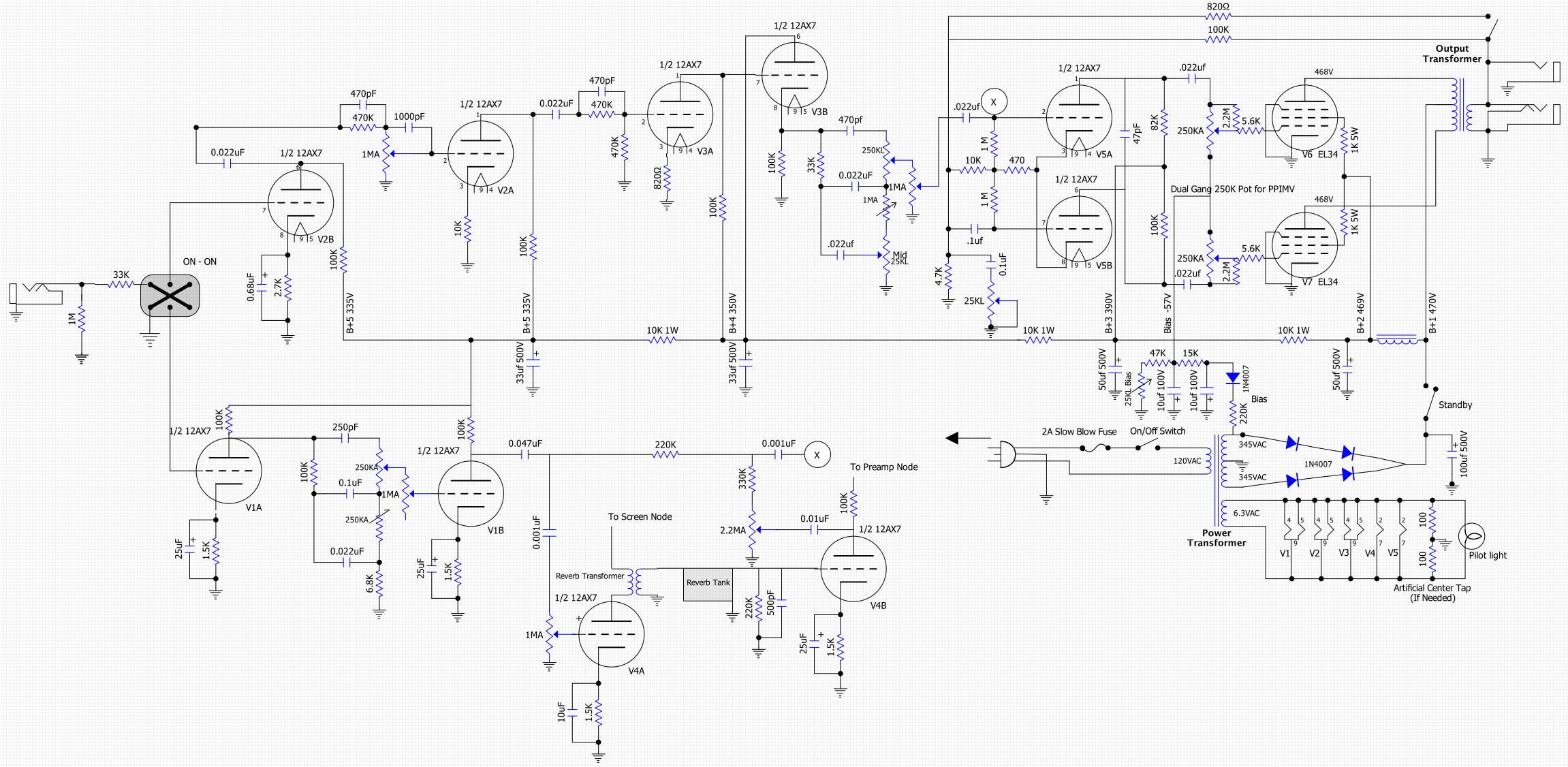
820Ω
100K
Output Transformer
1/2 12AX7
V3B
V3A
V2A
V2B
V5A
V5B
V6 EL34
V7 EL34
V1A
V1B
V4A
V4B
470pF
470K
1000pF
1MA
0.022uF
33K
ON - ON
1M
0.68uF
2.7K
B+5 335V
B+4 350V
B+3 390V
B+2 469V
B+1 470V
Bias -57V
10K 1W
33uf 500V
50uf 500V
100uf 500V
820Ω
10K
470
1 M
.022uf
.1uf
4.7K
25KL
0.1uF
250KL
Mid 25KL
Dual Gang 250K Pot for PPIMV
250KA
2.2M
5.6K
468V
1K 5W
82K
47pF
47K
15K
25KL Bias
10uf 100V
1N4007
220K
Bias
Standby
2A Slow Blow Fuse
On/Off Switch
120VAC
345VAC
6.3VAC
Power Transformer
Pilot light
Artificial Center Tap (If Needed)
250pF
0.047uF
0.001uF
330K
2.2MA
To Preamp Node
To Screen Node
Reverb Transformer
Reverb Tank
500pF
25uF
1.5K
6.8K
10uF