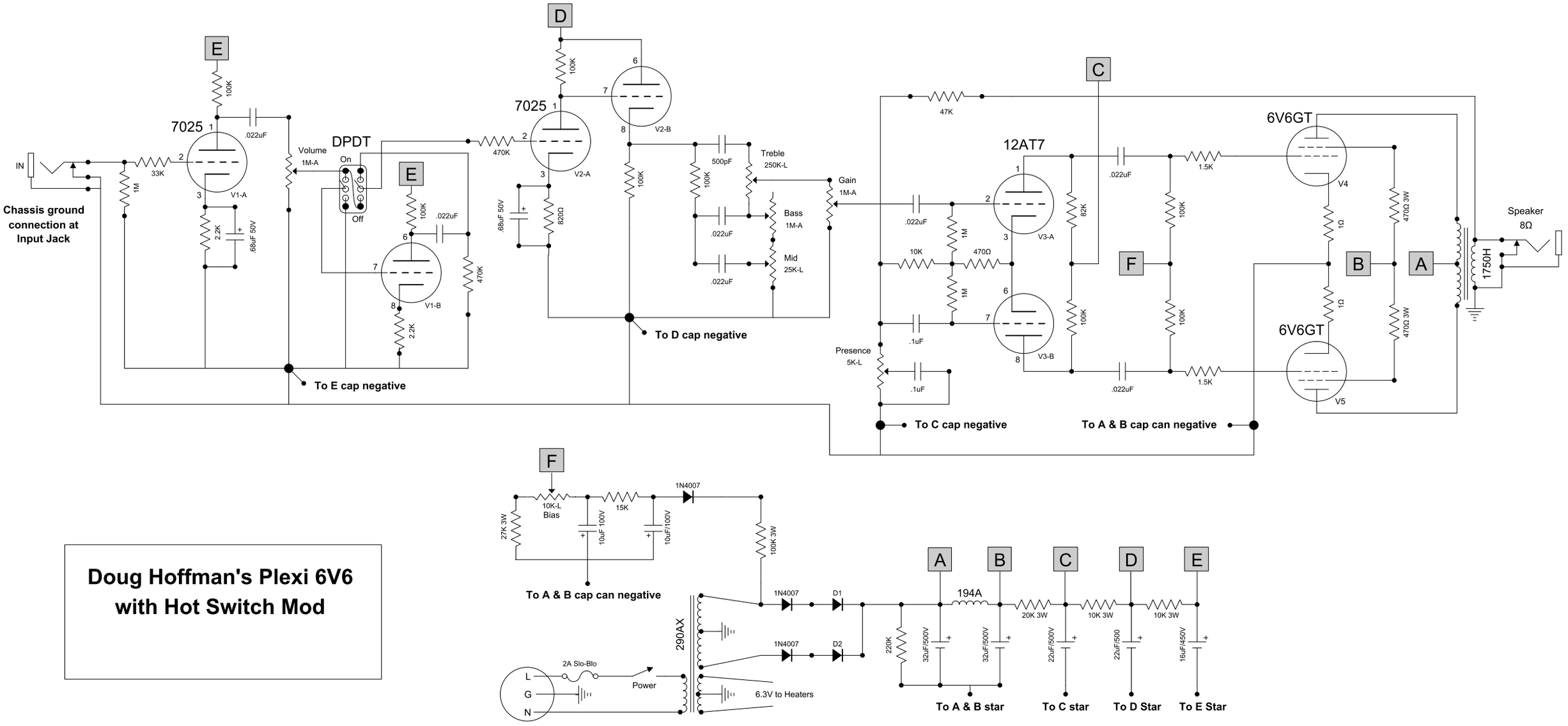
Doug Hoffman's Plexi 6V6
with Hot Switch Mod
IN
Chassis ground
connection at
Input Jack
7025
V1-A
33K
1M
2.2K
.68uF 50V
.022uF
100K
E
Volume
1M-A
DPDT
On
Off
V1-B
470K
2.2K
D
7025
V2-A
V2-B
820Ω
.68uF 50V
470K
To E cap negative
To D cap negative
500pF
Treble
250K-L
Bass
1M-A
Mid
25K-L
Gain
1M-A
C
47K
12AT7
V3-A
V3-B
82K
10K
470Ω
.1uF
Presence
5K-L
To C cap negative
F
6V6GT
V4
V5
1.5K
1Ω
470Ω 3W
B
A
1750H
Speaker
8Ω
To A & B cap can negative
10K-L
Bias
15K
1N4007
27K 3W
10uF 100V
100K 3W
D1
D2
290AX
2A Slo-Blo
Power
L
G
N
6.3V to Heaters
194A
220K
32uF/500V
20K 3W
10K 3W
22uF/500V
16uF/450V
To A & B star
To C star
To D Star
To E Star