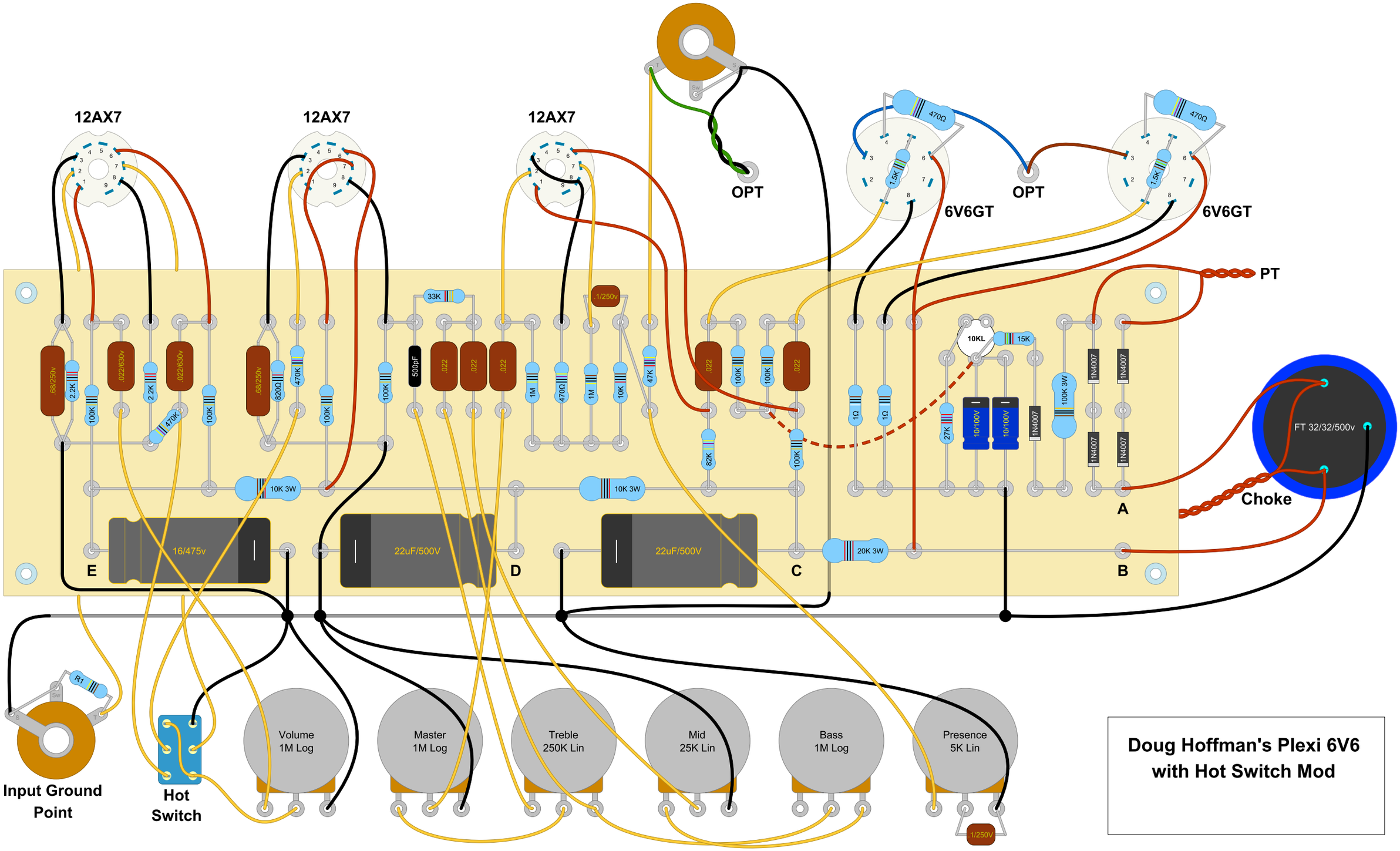

Doug Hoffman's Plexi 6V6 with Hot Switch Mod