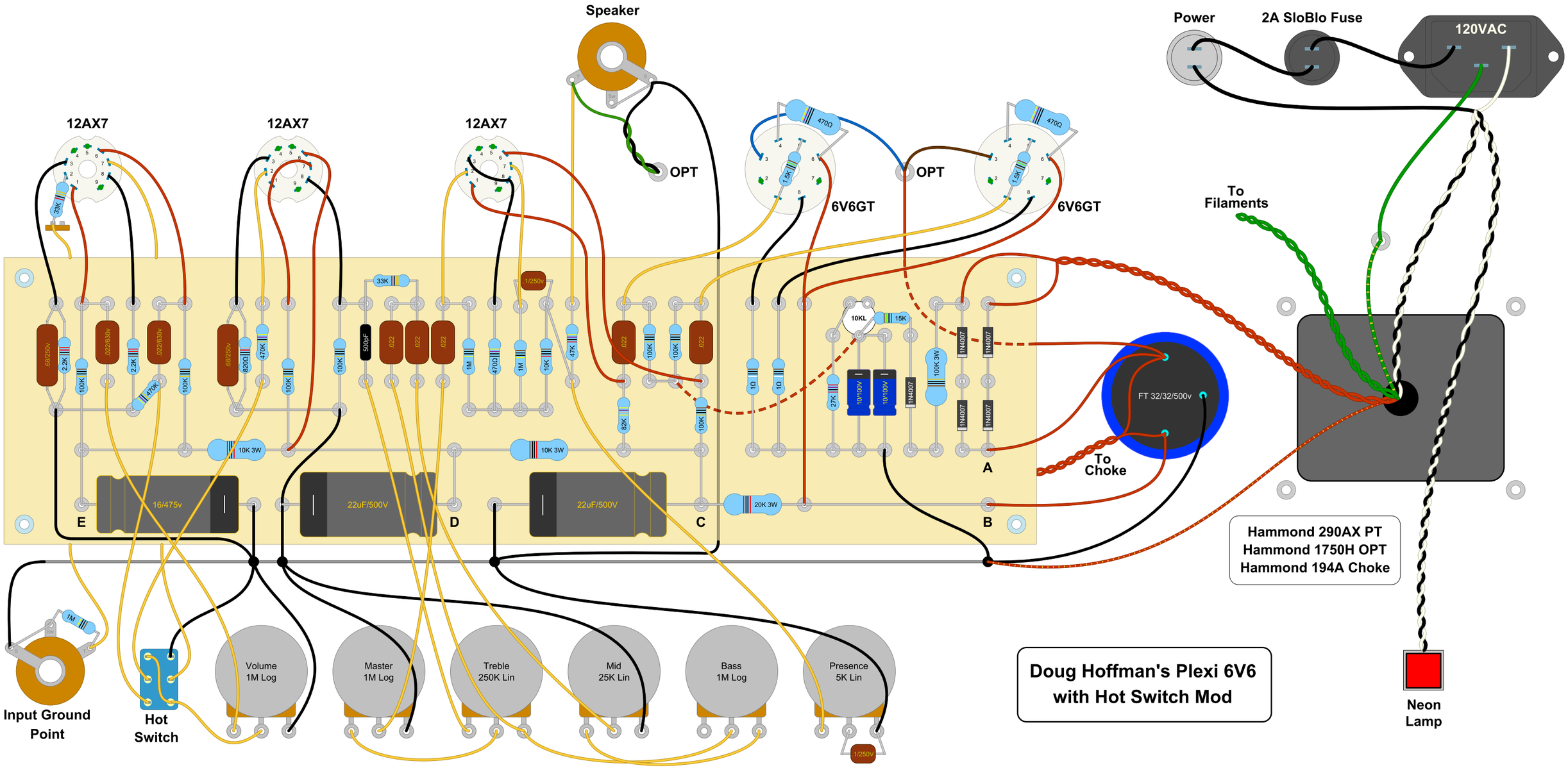
Speaker
Power
2A SloBlo Fuse
120VAC
12AX7
12AX7
12AX7
OPT
OPT
6V6GT
6V6GT
To Filaments
33K
470Ω
1.5K
68/250v
2.2K
.022/630v
100K
470K
68/250v
820Ω
470K
100K
100K
33K
500pF
.022
.022
.022
1M
470Ω
1M
10K
47K
1/250v
.022
100K
100K
.022
82K
100K
1Ω
1Ω
10KL
15K
27K
10/100V
10/100V
1N4007
100K 3W
1N4007
1N4007
1N4007
1N4007
10K 3W
10K 3W
16/475v
22uF/500V
22uF/500V
20K 3W
E
D
C
B
A
FT 32/32/500v
To Choke
Hammond 290AX PT
Hammond 1750H OPT
Hammond 194A Choke
1M
Input Ground Point
Hot Switch
Volume 1M Log
Master 1M Log
Treble 250K Lin
Mid 25K Lin
Bass 1M Log
Presence 5K Lin
1/250V
Doug Hoffman's Plexi 6V6 with Hot Switch Mod
Neon Lamp