MAGNATONE M10-A

Revibe for wwscott

Drawn by sluckey 08/10/2020

Date of all Voltage Readings: November 15, 2020

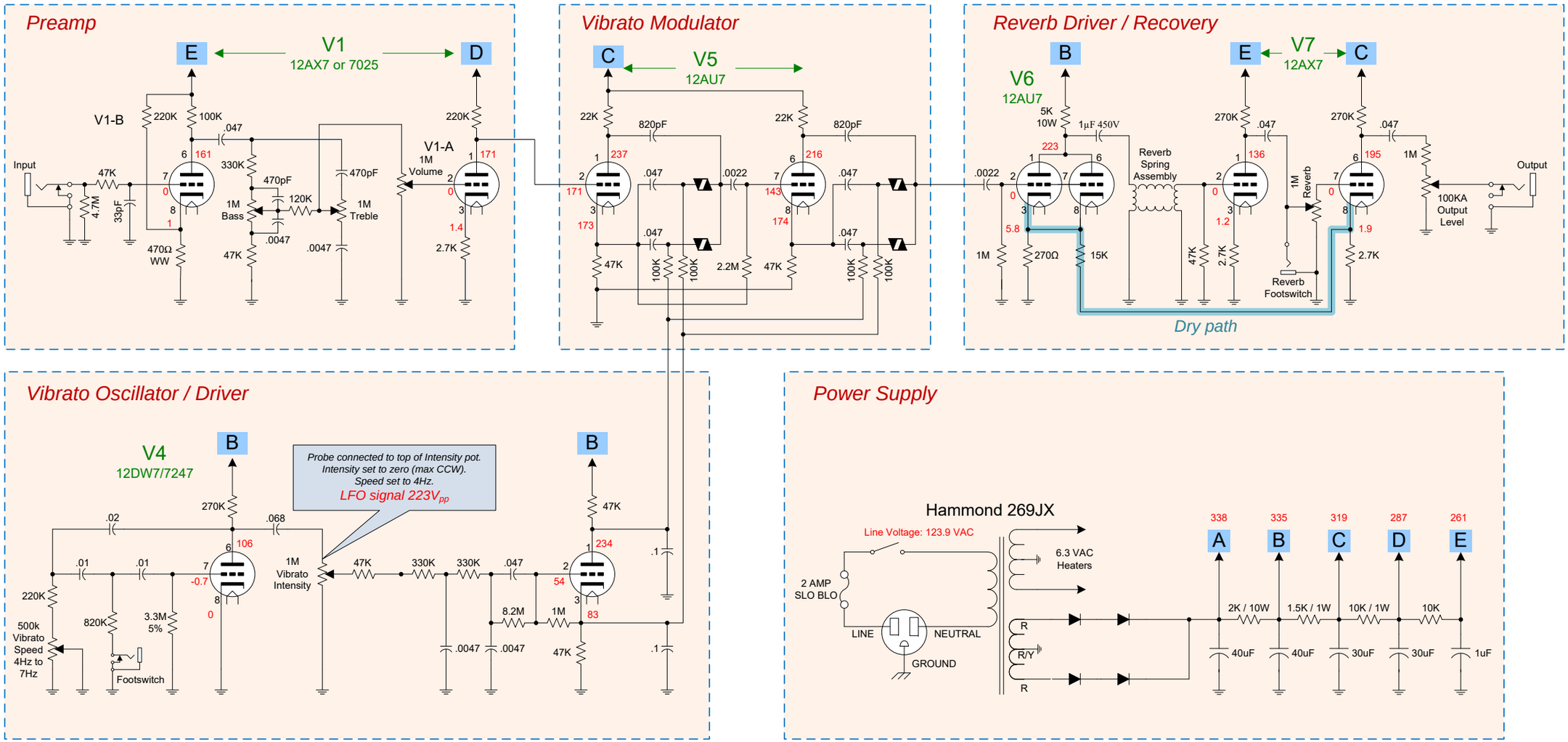
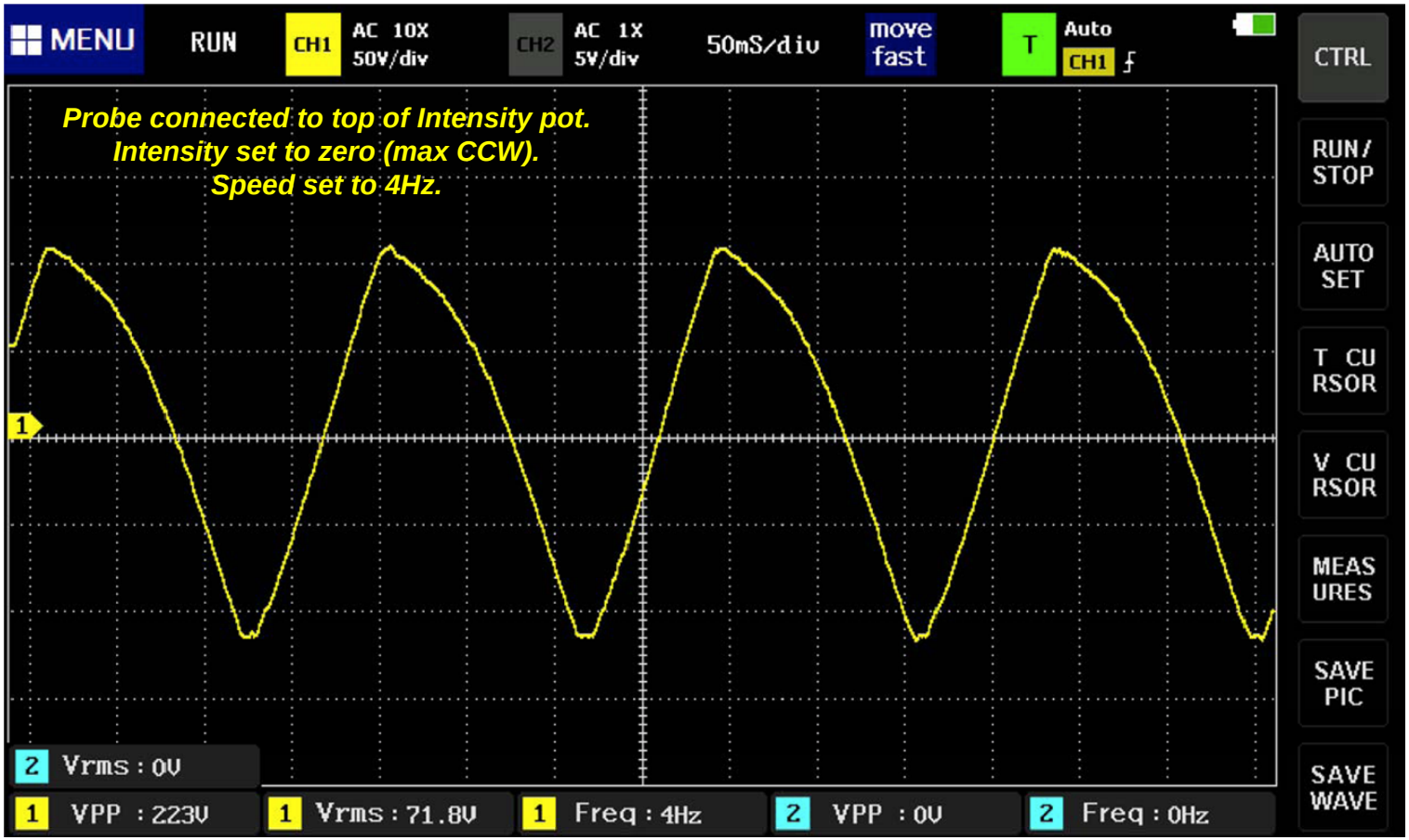
Vibrato Oscillator / Driver