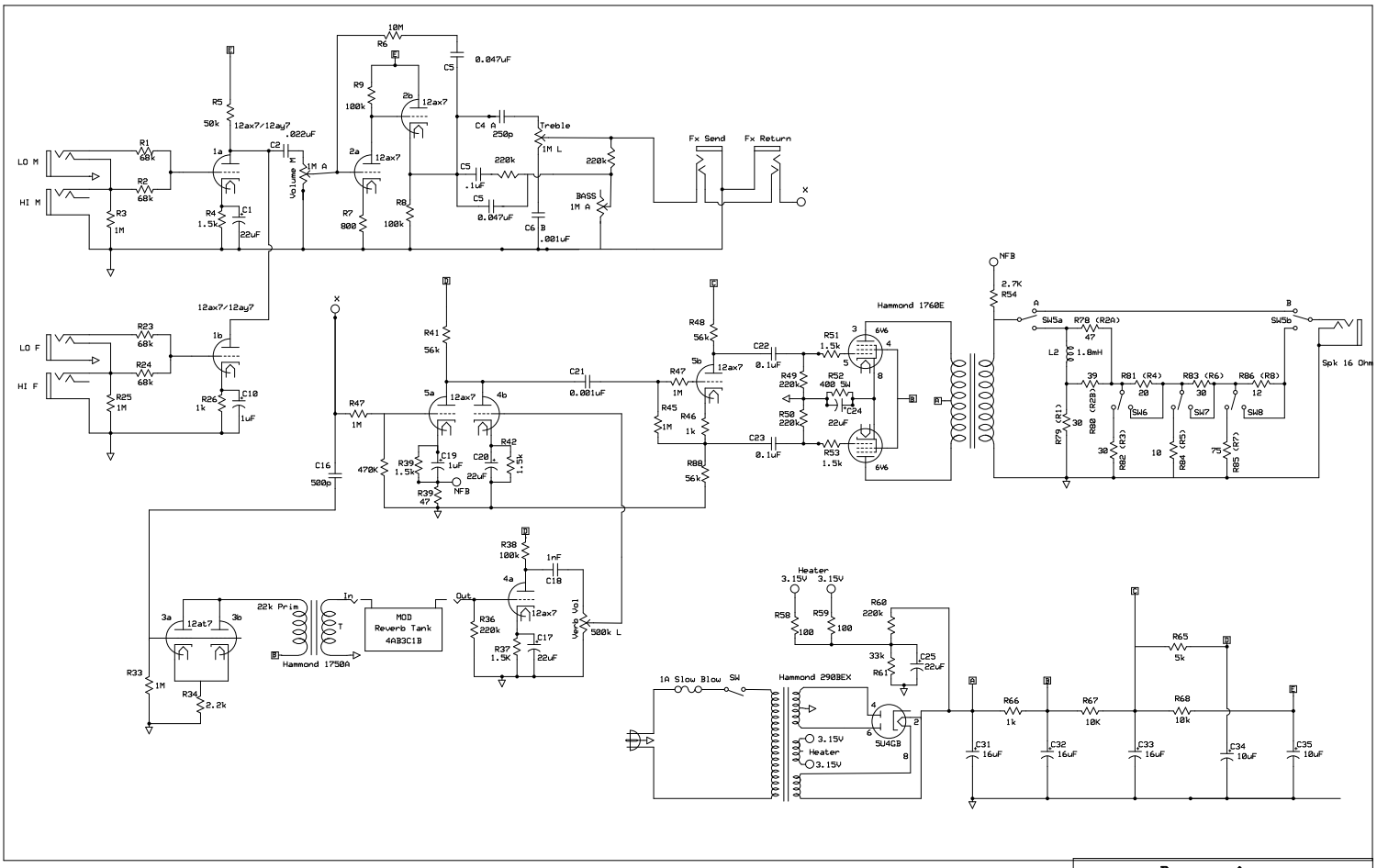

Boysen Amps		
The Blue 16 ohm		
Christian Boysen	Rev 1.0 13-01-2021	Full Schem