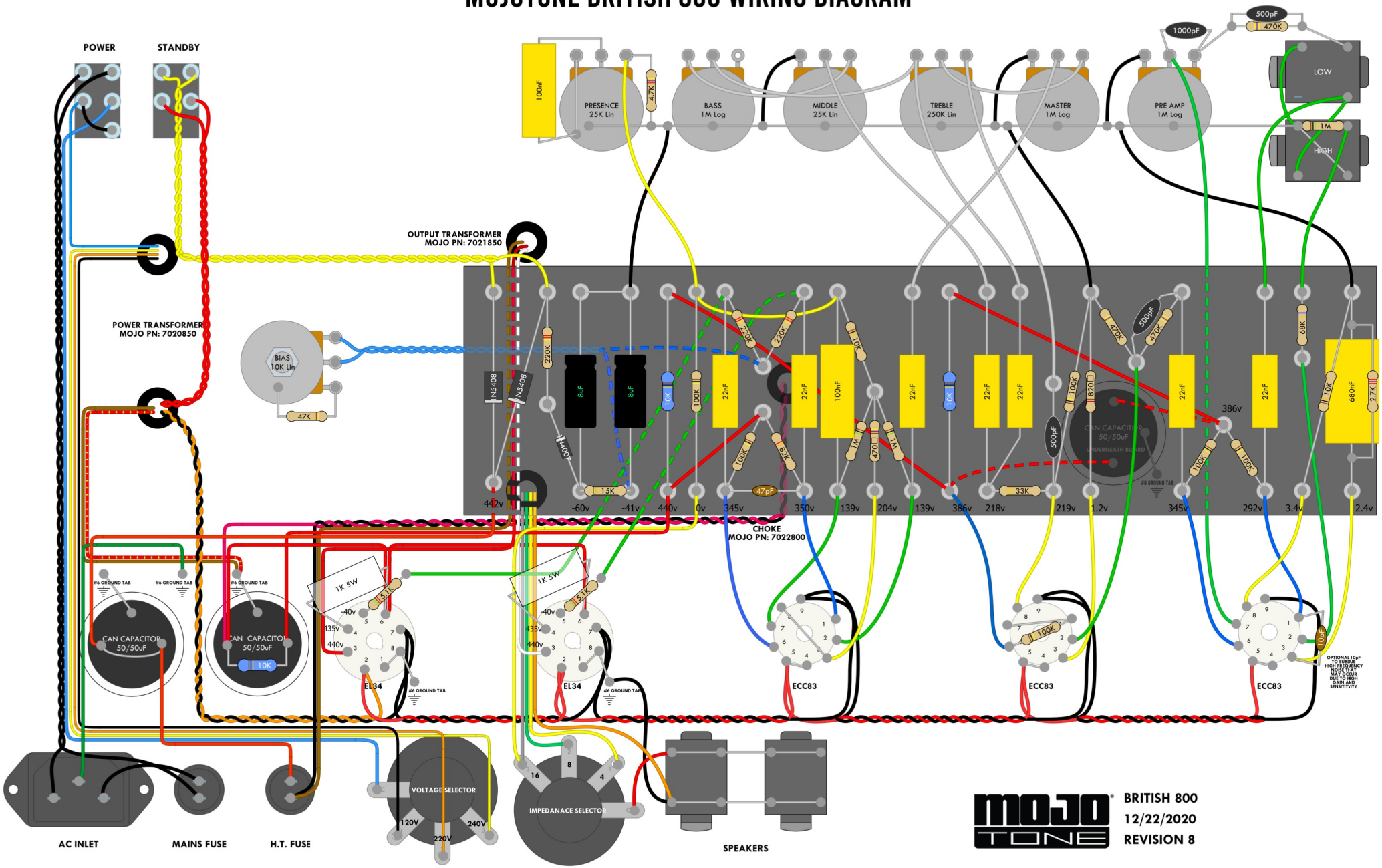MOJOTONE BRITISH 800 WIRING DIAGRAM