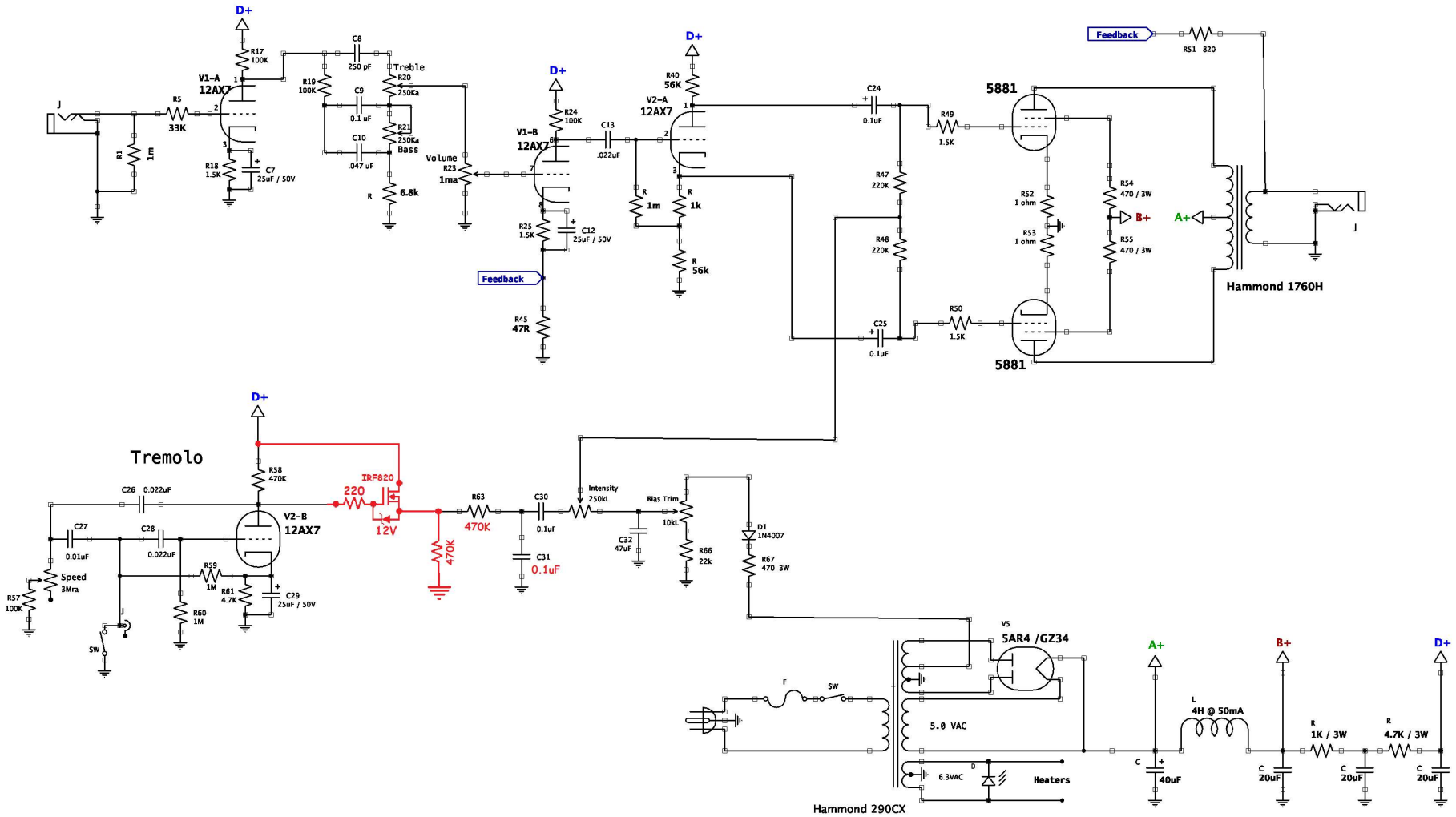

Company Name		
Schematic Name		
A C Held	Rev 1.0 2021-10-14	Page #