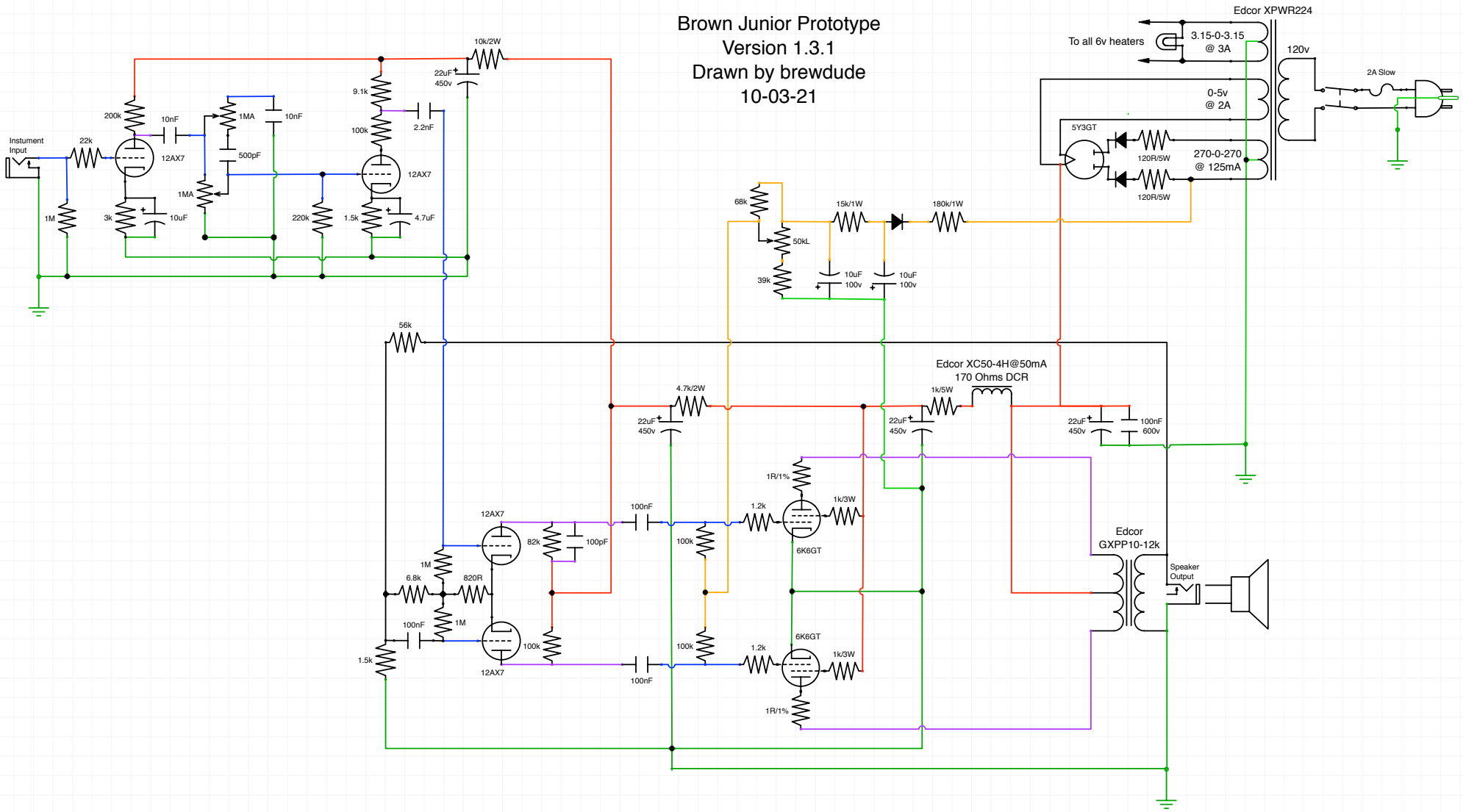Brown Junior Prototype
Version 1.3.1
Drawn by brewdude
10-03-21