all resistors 1/4 Watt unless otherwise specified

Supro A45e

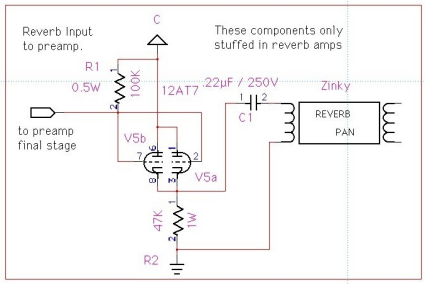

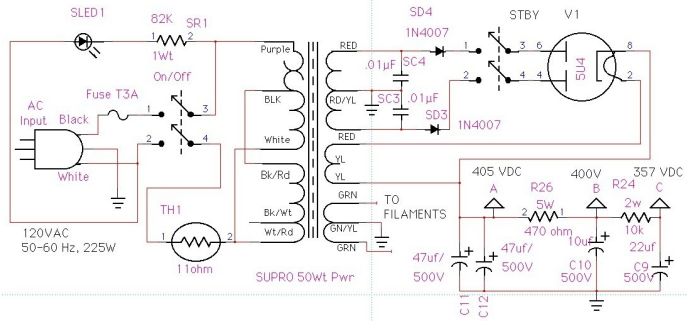

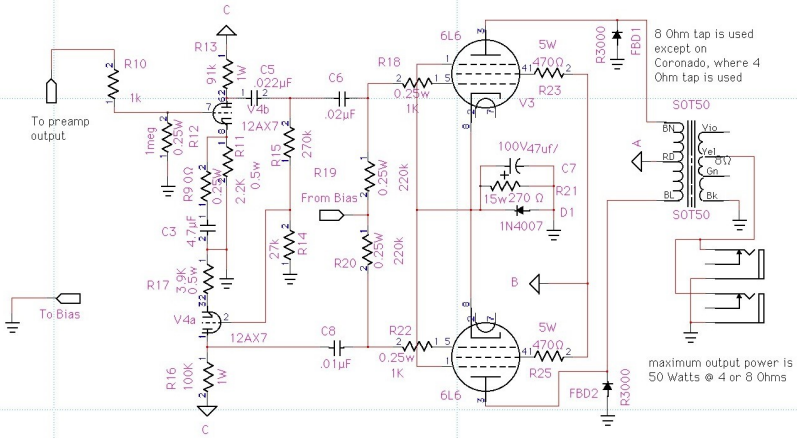

THIS DRAWING CONTAINS CONFIDENTIAL INFORMATION. ANY REPRODUCTION IN PART OR WHOLE IS STRICTLY PROHIBITED WITHOUT WRITTEN PERMISSION!