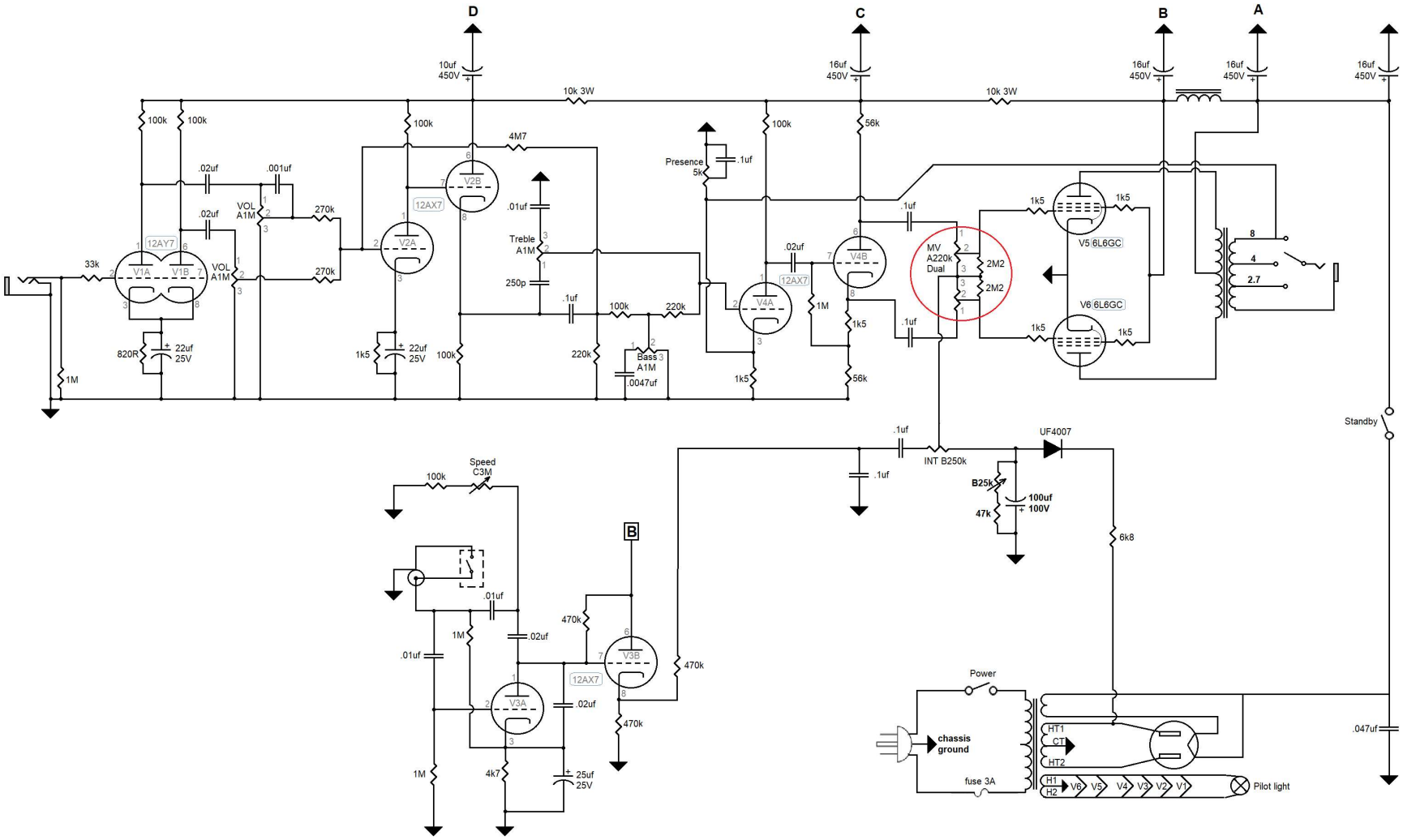
D
C
B
A
10uf 450V
16uf 450V
16uf 450V
16uf 450V
10k 3W
10k 3W
100k
100k
100k
4M7
56k
.02uf
.001uf
.02uf
VOL A1M
270k
270k
12AY7
V1A
V1B
33k
820R
22uf 25V
1M
12AX7
V2B
V2A
1k5
22uf 25V
100k
.01uf
Treble A1M
250p
.1uf
100k
220k
220k
Bass A1M
.0047uf
Presence 5k
.1uf
100k
12AX7
V4A
1k5
.02uf
V4B
1M
1k5
56k
.1uf
.1uf
MV A220k Dual
2M2
2M2
1k5
1k5
V5 6L6GC
V6 6L6GC
1k5
1k5
8
4
2.7
Standby
.1uf
INT B250k
UF4007
.1uf
B25k
47k
100uf 100V
6k8
Speed C3M
100k
B
.01uf
1M
.02uf
.01uf
470k
V3B
12AX7
470k
V3A
.02uf
470k
1M
4k7
25uf 25V
Power
chassis ground
fuse 3A
HT1
CT
HT2
H1
H2
V6
V5
V4
V3
V2
V1
Pilot light
.047uf