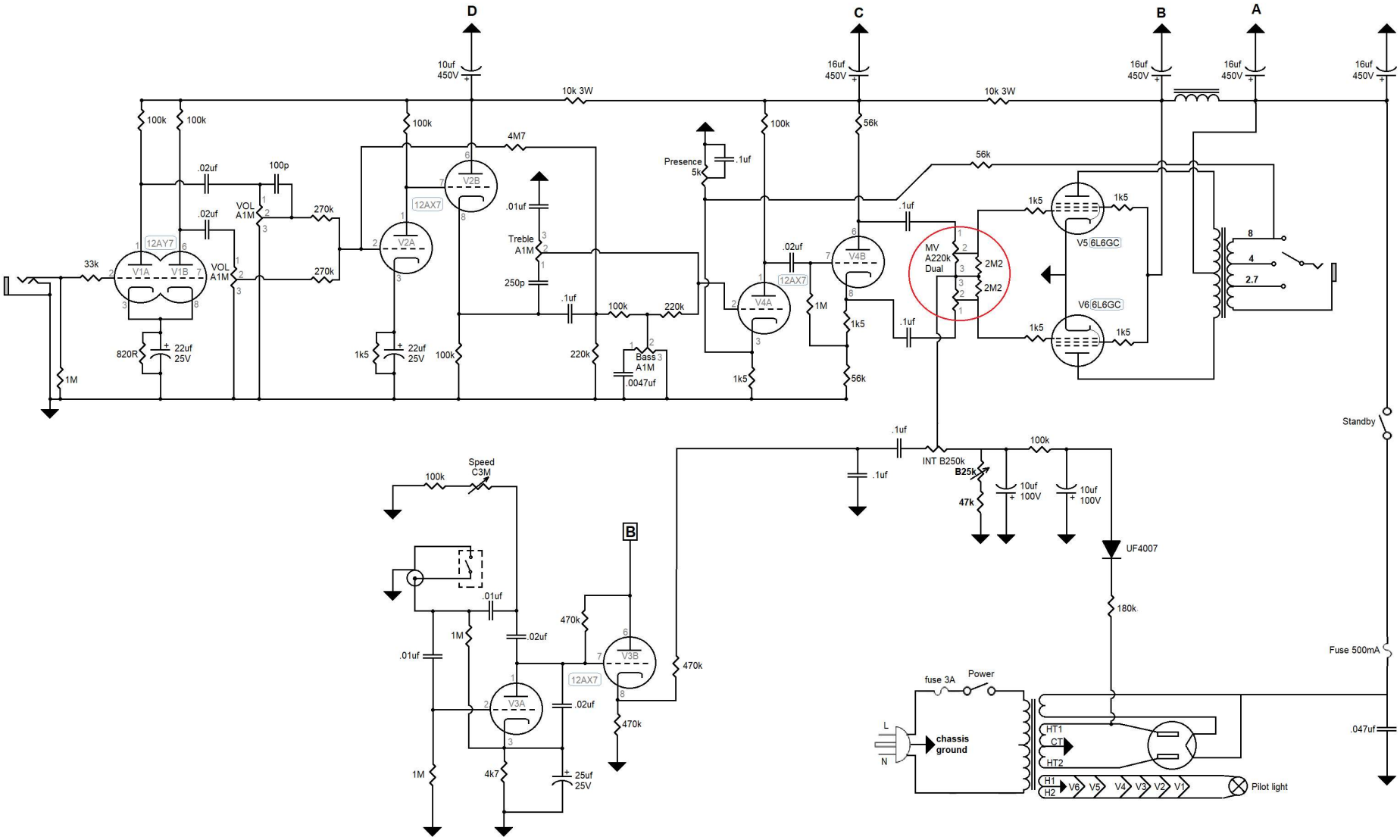
D
C
B
A
10uf 450V
16uf 450V
10k 3W
100k
56k
4M7
.02uf
100p
VOL A1M
270k
12AY7
V1A
V1B
33k
820R
22uf 25V
1M
12AX7
V2A
V2B
1k5
.01uf
Treble A1M
250p
.1uf
220k
Bass A1M
.0047uf
Presence 5k
V4A
V4B
1M
MV A220k Dual
2M2
V5 6L6GC
V6 6L6GC
8
4
2.7
Standby
INT B250k
B25k
47k
10uf 100V
UF4007
180k
Speed C3M
V3A
V3B
470k
4k7
25uf 25V
Fuse 500mA
fuse 3A
Power
L
N
chassis ground
HT1
CT
HT2
H1
H2
V6
V5
V4
V3
V2
V1
Pilot light
.047uf