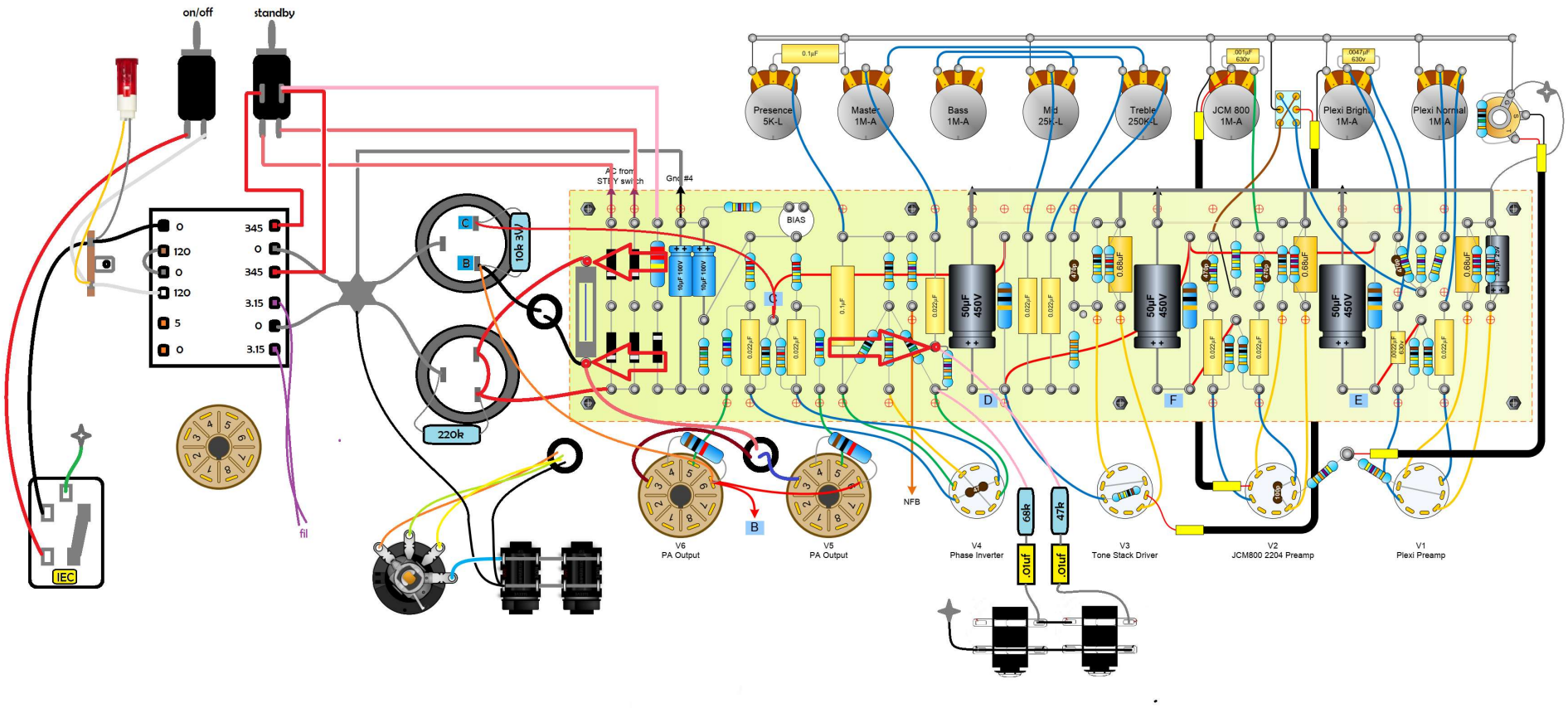
on/off
standby
0
120
0
120
5
0
345
0
345
3.15
0
3.15
fil
IEC
C
B
10k 3W
220k
AC from STBY switch
Gnd #4
BIAS
10µF 100V
10µF 100V
0.022µF
0.1µF
50µF 450V
0.68uF
NFB
D
F
E
Presence 5K-L
Master 1M-A
Bass 1M-A
Mid 25K-L
Treble 250K-L
JCM 800 1M-A
Plexi Bright 1M-A
Plexi Normal 1M-A
0.1µF
.001µF 630v
.0047µF 630v
V6
PA Output
V5
PA Output
V4
Phase Inverter
V3
Tone Stack Driver
V2
JCM800 2204 Preamp
V1
Plexi Preamp
68k
47k
.01uf
.01uf