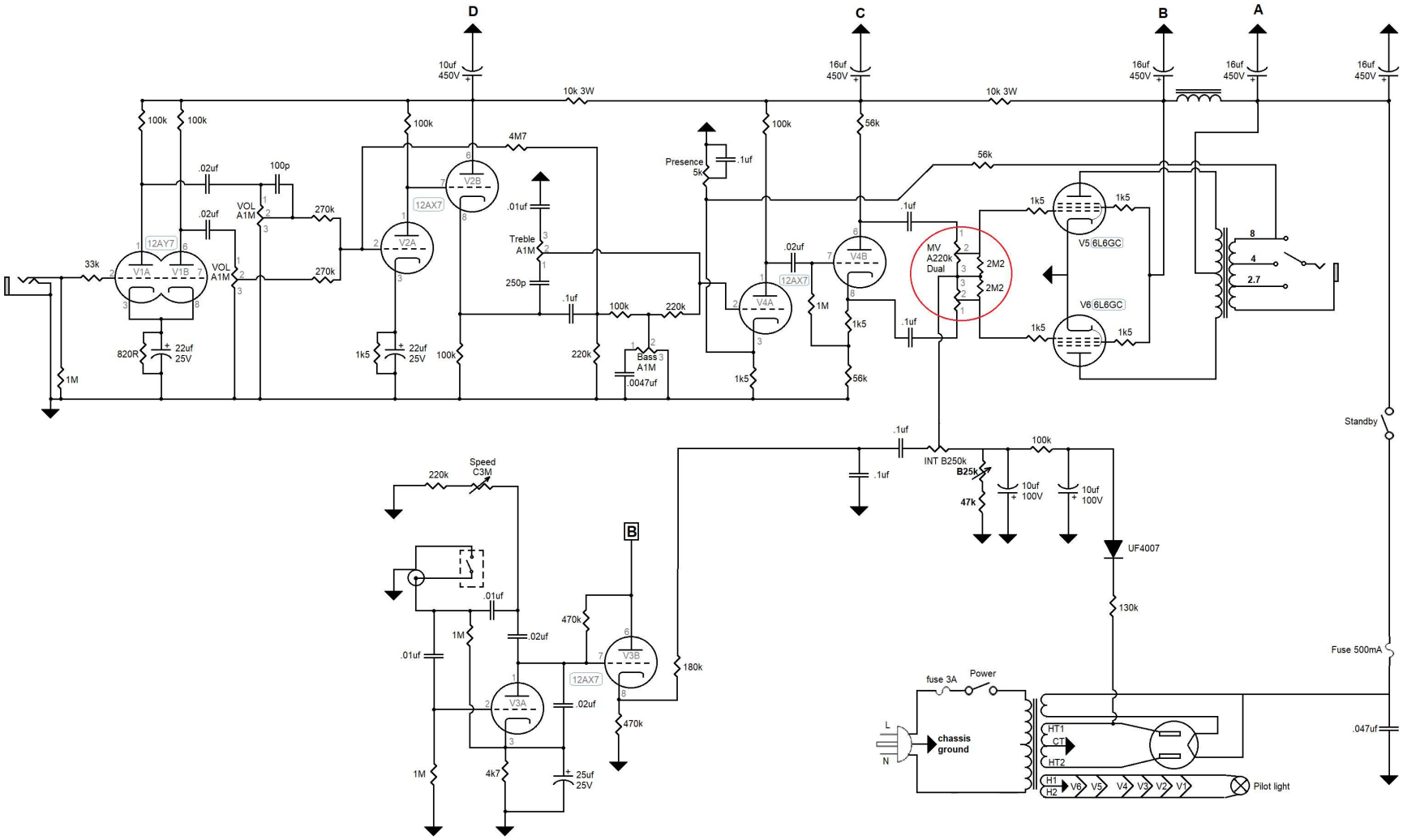
D
C
B
A
10uf 450V
16uf 450V
16uf 450V
16uf 450V
10k 3W
10k 3W
100k
100k
100k
4M7
100k
56k
56k
.02uf
100p
.02uf
VOL A1M
270k
270k
12AY7
V1A
V1B
33k
820R
22uf 25V
1M
12AX7
V2B
V2A
1k5
22uf 25V
100k
.01uf
Treble A1M
250p
.1uf
100k
220k
220k
Bass A1M
.0047uf
Presence 5k
.1uf
12AX7
V4A
V4B
.02uf
1M
1k5
1k5
56k
.1uf
.1uf
MV A220k Dual
2M2
2M2
1k5
1k5
V5 6L6GC
V6 6L6GC
1k5
1k5
8
4
2.7
Standby
.1uf
INT B250k
B25k
47k
100k
10uf 100V
10uf 100V
.1uf
UF4007
130k
Fuse 500mA
.047uf
Speed C3M
220k
B
.01uf
1M
.02uf
.01uf
470k
12AX7
V3B
V3A
.02uf
180k
470k
1M
4k7
25uf 25V
fuse 3A
Power
L
N
chassis ground
HT1
CT
HT2
H1
H2
V6
V5
V4
V3
V2
V1
Pilot light