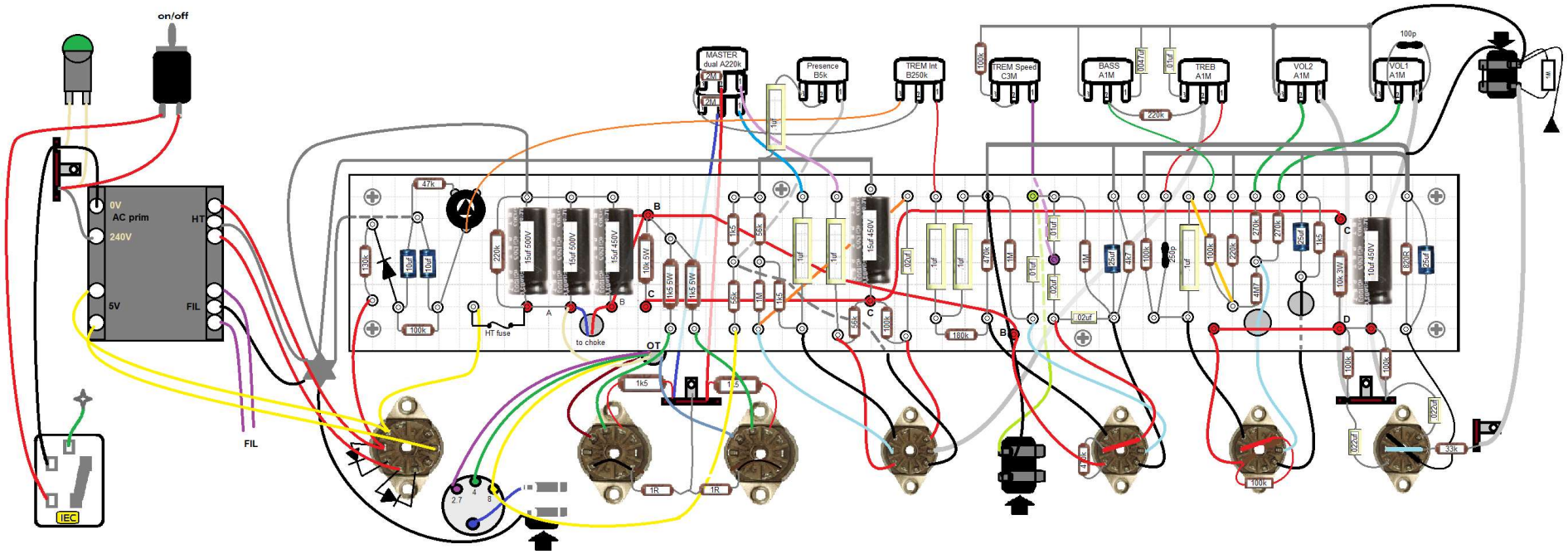
on/off
0V
AC prim
240V
HT
5V
FIL
IEC
FIL
47k
130k
40uf
10uf
100k
220k
15uf 500V
15uf 500V
15uf 450V
HT fuse
to choke
A
B
C
10k 5W
1k5 5W
1k5 5W
OT
1k5
1.5
1R
1R
MASTER
dual A220k
2M
2M
Presence
B5k
TREM Int
B250k
1uf
56k
1M
1k5
1uf
1uf
15uf 450V
02uf
1uf
1uf
180k
470k
1M
01uf
01uf
02uf
1M
25uf
1k7
100k
56p
1uf
100k
220k
270k
270k
25uf
1k5
4k7
4k7
10k 3W
10uf 450V
330k
25uf
100k
100k
100k
100k
02uf
02uf
33k
100k
TREM Speed
C3M
100k
BASS
A1M
02uf
0.1uf
220k
TREB
A1M
VOL2
A1M
VOL1
A1M
100p
1k