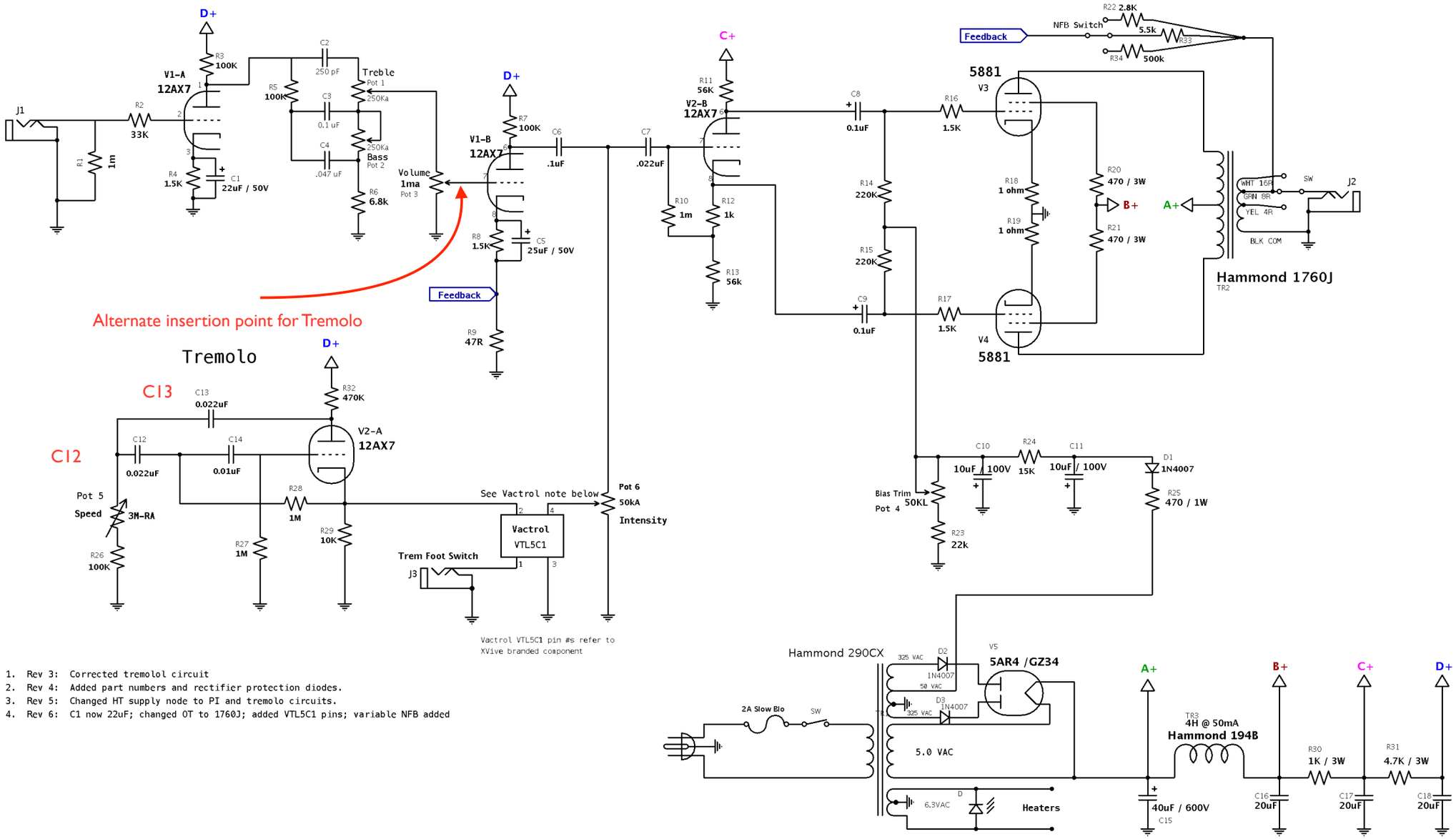

1. Rev 3: Corrected tremolol circuit
2. Rev 4: Added part numbers and rectifier protection diodes.
3. Rev 5: Changed HT supply node to PI and tremolo circuits.
4. Rev 6: C1 now 22uF; changed OT to 1760J; added VTL5C1 pins; variable NFB added

Princeton 5881 T-O-N		
A C Held	Rev 6 2021-12-22	