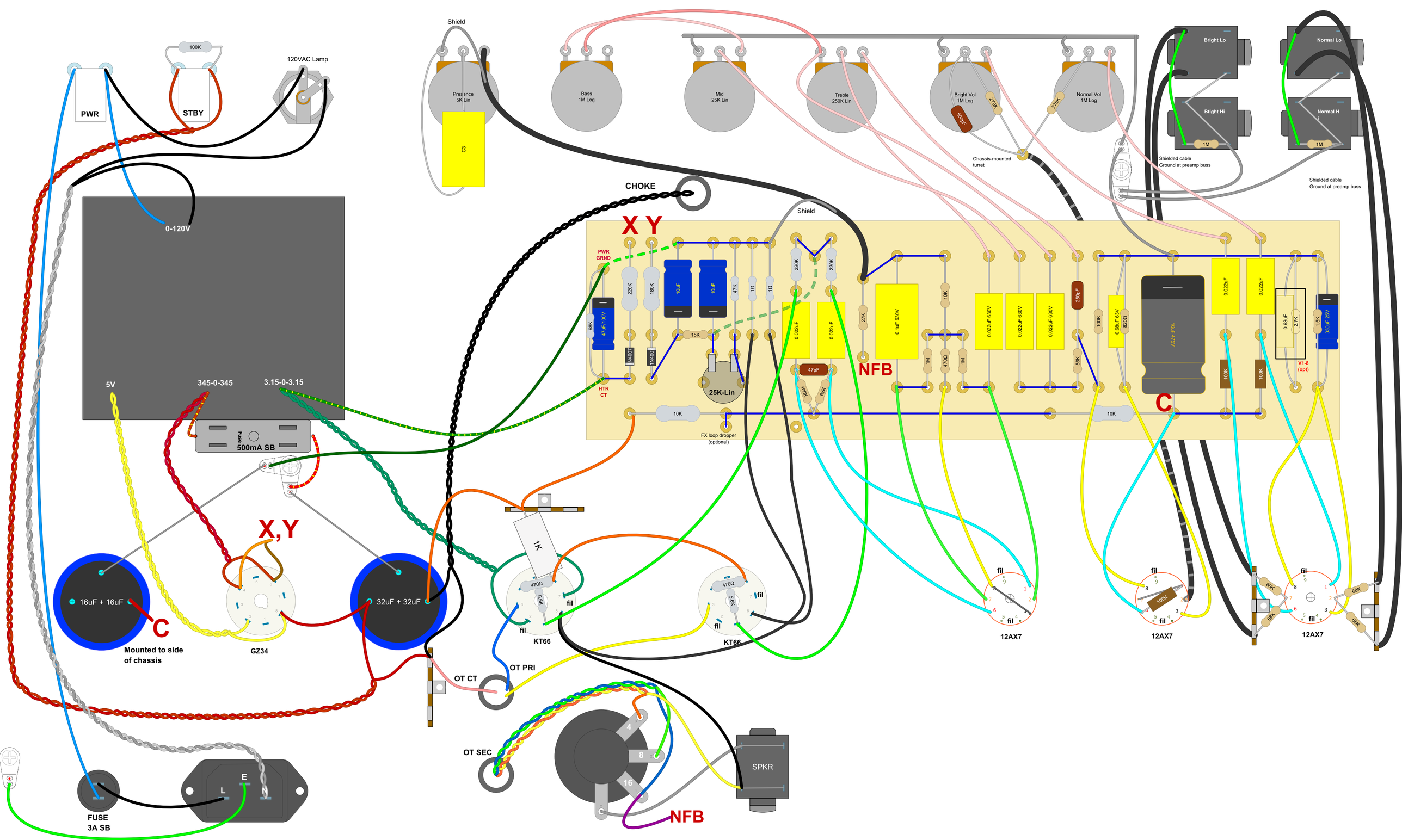
Shield
Presence
5K Lin
Bass
1M Log
Mid
25K Lin
Treble
250K Lin
Bright Vol
1M Log
820pF
270K
Normal Vol
1M Log
Bright Lo
Bright Hi
1M
Normal Lo
Normal H
1M
Chassis-mounted
turret
Shielded cable
Ground at preamp buss
Shielded cable
Ground at preamp buss
100K
PWR
STBY
120VAC Lamp
CHOKE
Shield
0-120V
X Y
PWR
GRND
HTR
CT
220K
180K
10uF
10uF
47K
1Ω
1Ω
220K
220K
68K
47uF/100V
1N4007
1N4007
15K
25K-Lin
0.022uF
0.022uF
47pF
100K
82K
27K
0.1uF 630V
10K
1M
470Ω
1M
0.022uF 630V
0.022uF 630V
0.022uF 630V
250pF
56K
100K
0.68uF 63V
820Ω
16uF 475V
0.022uF
0.022uF
100K
100K
0.68uF
2.7K
1.5K
330uF 25V
V1-8
(opt)
10K
10K
FX loop dropper
(optional)
NFB
C
5V
345-0-345
3.15-0-3.15
Fuse
500mA SB
X,Y
16uF + 16uF
C
Mounted to side
of chassis
GZ34
32uF + 32uF
1K
470Ω
5.6K
fil
fil
KT66
470Ω
5.6K
fil
fil
KT66
fil
fil
fil
fil
12AX7
fil
fil
fil
100K
12AX7
fil
fil
fil
68K
68K
68K
68K
12AX7
OT CT
OT PRI
OT SEC
4
8
16
SPKR
NFB
FUSE
3A SB
L
E
N