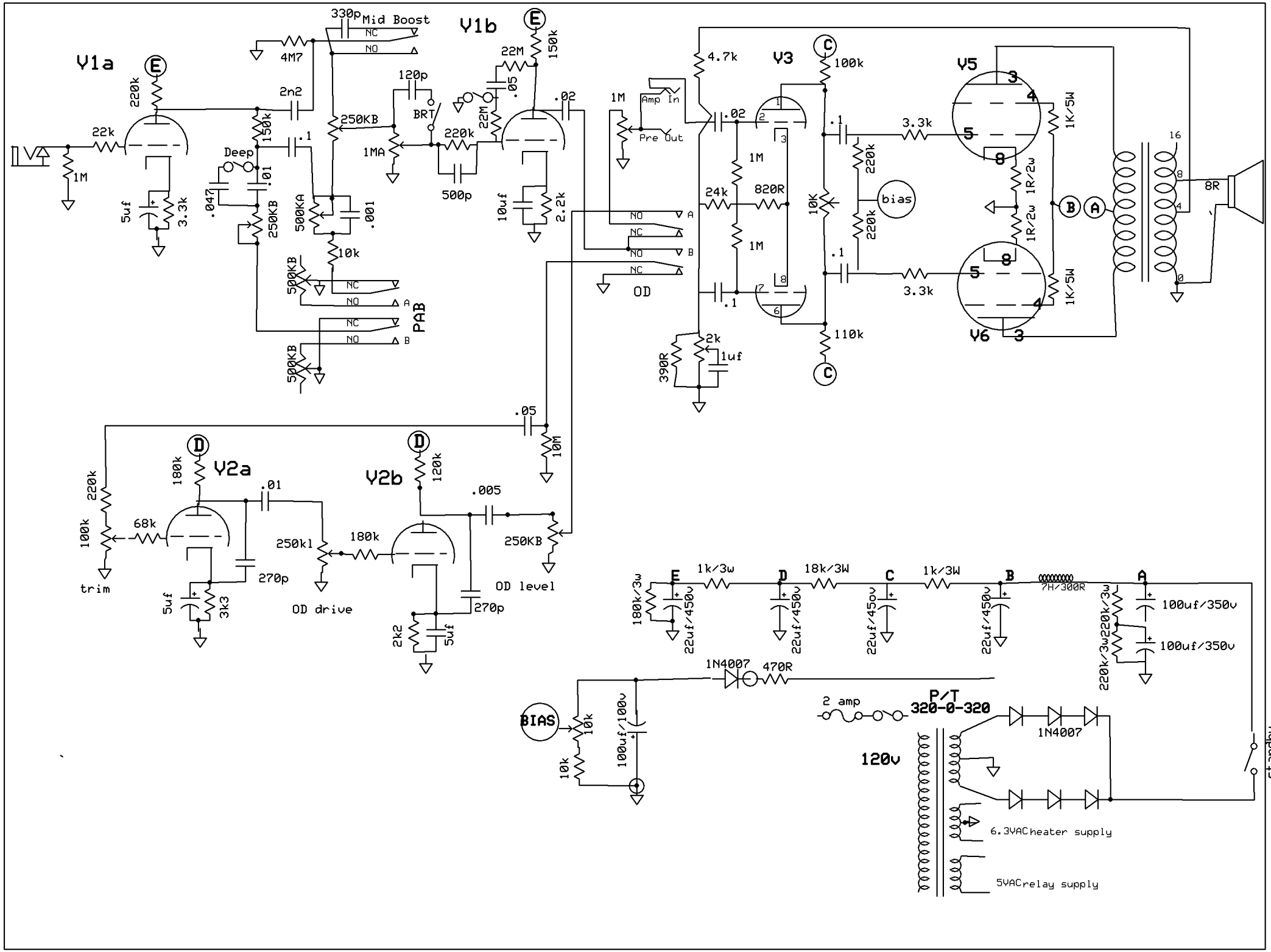
V1a
V1b
V2a
V2b
V3
V5
V6
Mid Boost
NC
NO
330p
4M7
2n2
150k
220k
22k
1M
5uf
3.3k
Deep
.01
.047
250KB
500KA
.001
10k
500KB
PAB
120p
BRT
1MA
220k
500p
22M
.05
.02
10uf
2.2k
Amp In
Pre Out
OD
4.7k
24k
820R
10K
bias
3.3k
1K/5W
1R/2w
8R
16
110k
390R
2k
1uf
.1
.05
10M
180k
68k
100k
trim
.01
250k1
OD drive
270p
.005
250KB
OD level
2k2
180k/3w
1k/3w
18k/3W
1k/3W
7H/300R
22uf/450v
22uf/45ov
220k/3w
100uf/350v
1N4007
470R
BIAS
100uf/100v
2 amp
P/T
320-0-320
120v
6.3VAC heater supply
5VAC relay supply
standby