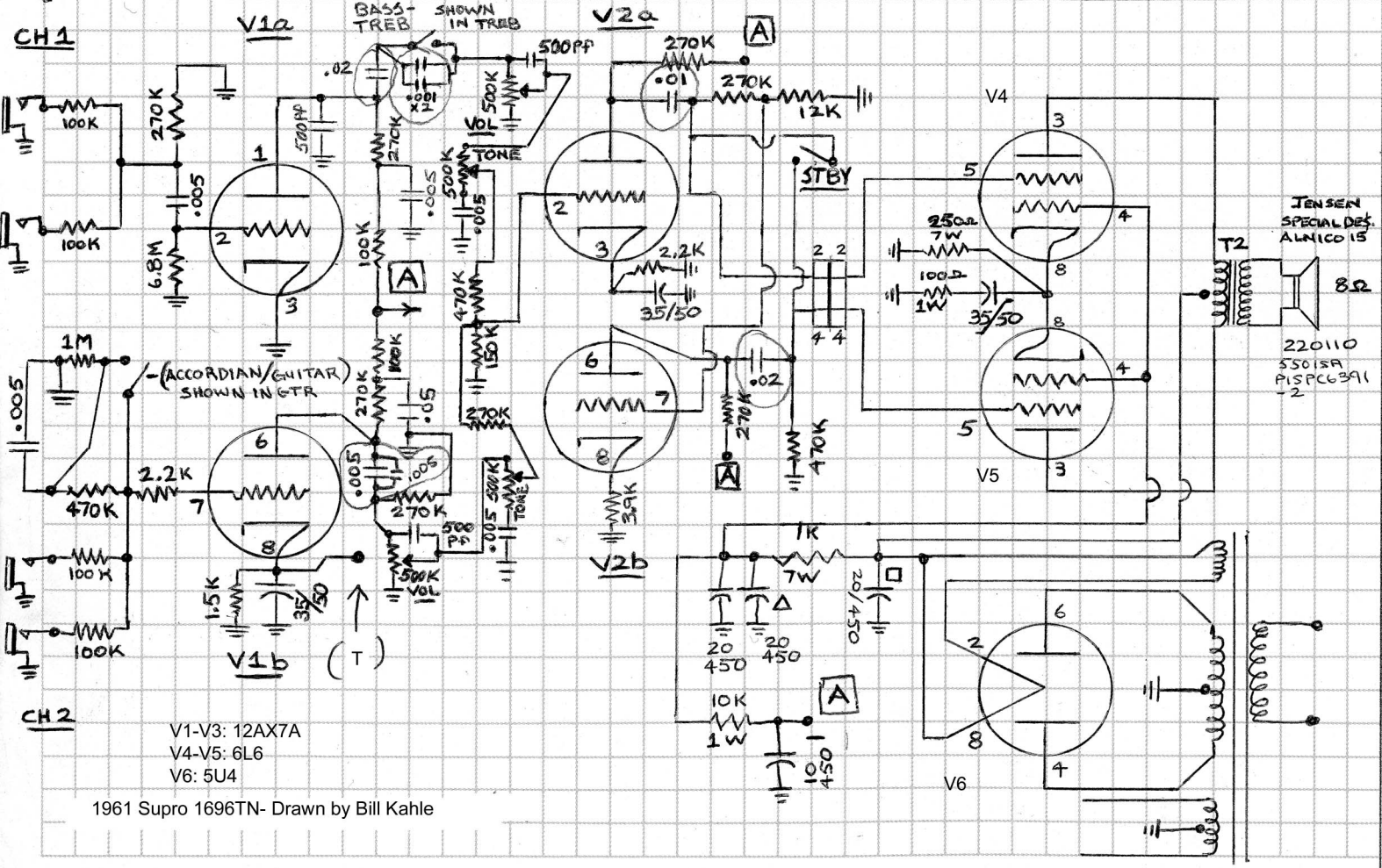

1961 Supro 1696TN- Drawn by Bill Kahle

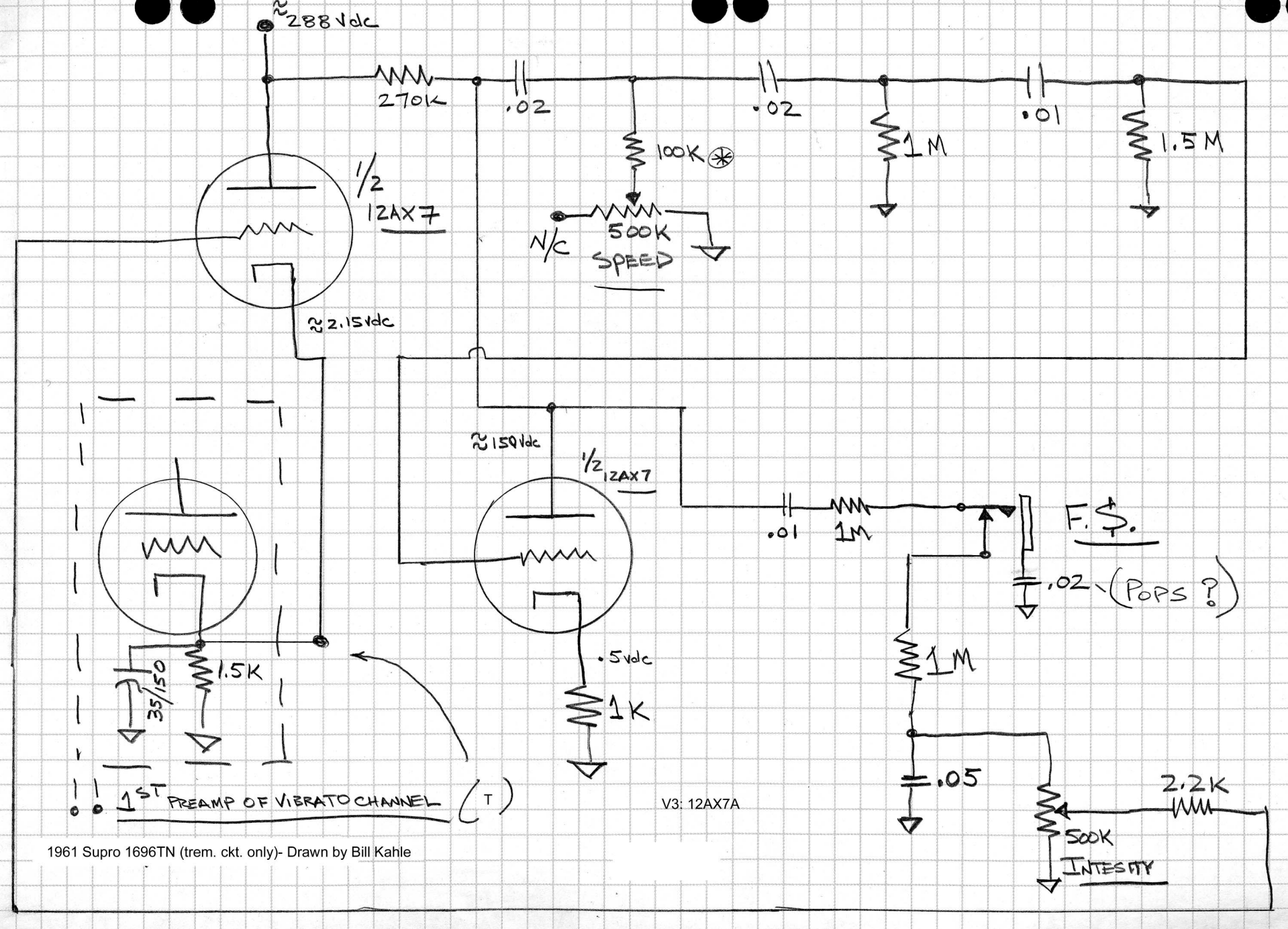

1961 Supro 1696TN (trem. ckt. only)- Drawn by Bill Kahle