Super-Power Amplifier

Fender Model Super Twin Guitar-Bass Amp

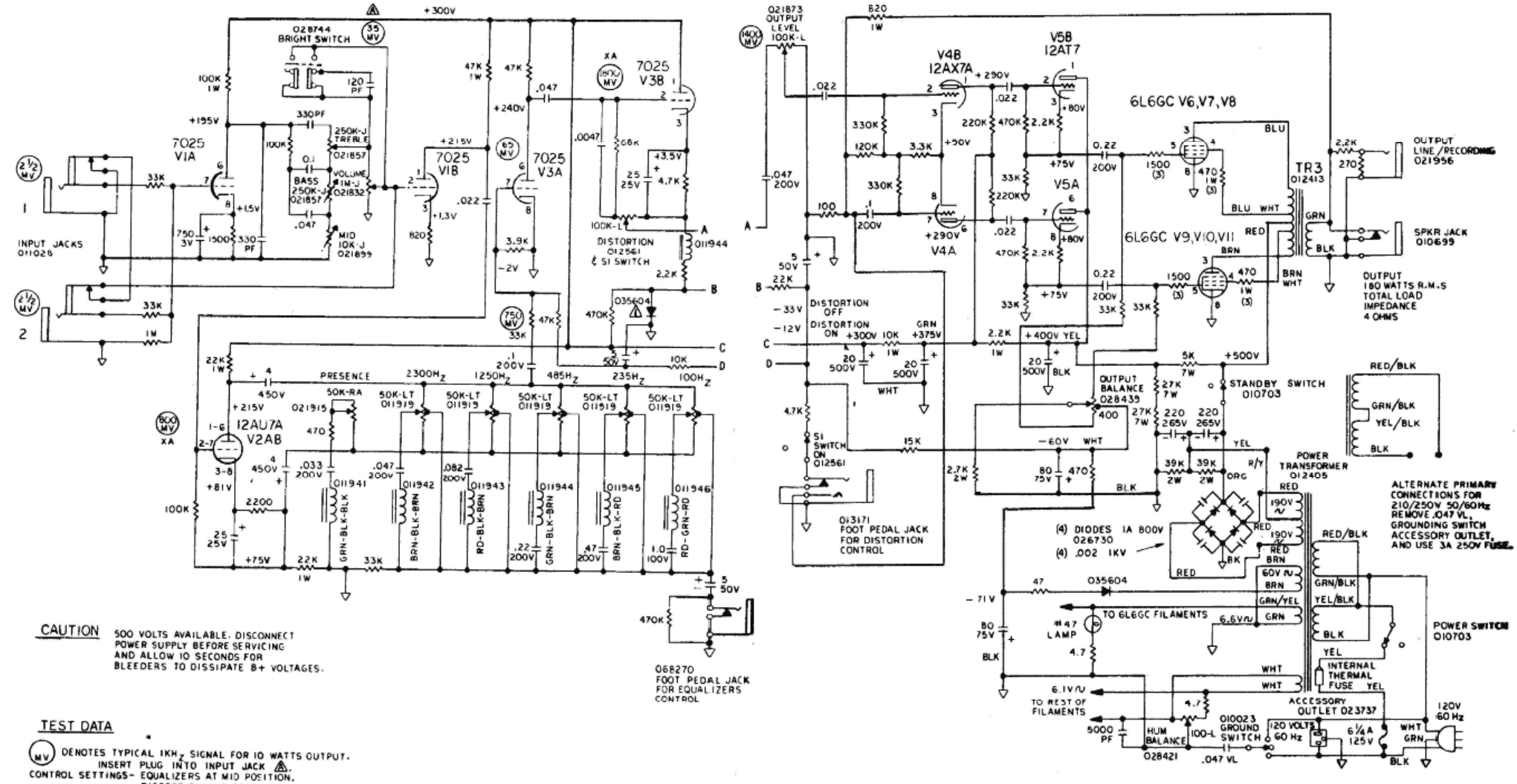

TEST DATA

(MV) DENOTES TYPICAL 1KHz SIGNAL FOR 10 WATTS OUTPUT. INSERT PLUG INTO INPUT JACK ⚠.

CONTROL SETTINGS- EQUALIZERS AT MID POSITION, DISTORTION AND PRESENCE AT MINIMUMUM, OTHERS AT MAXIMUM.

XA-USE 0.1MFD 600V CAPACITOR IN SERIES WITH GENERATOR.

D.C. VOLTAGES READ WITH NO SIGNAL INPUT AND DISTORTION "OFF".

⚠ 035604 CONDUCTS WITH DISTORTION "ON".

2. ALL RESISTORS ARE 1/2 W, 10%.

1. ALL CAPACITORS AT LEAST 600 W.V.D

NOTES: UNLESS OTHERWISE SPECIFIED

NOTES: UNLESS OTHERWISE SPECIFIED