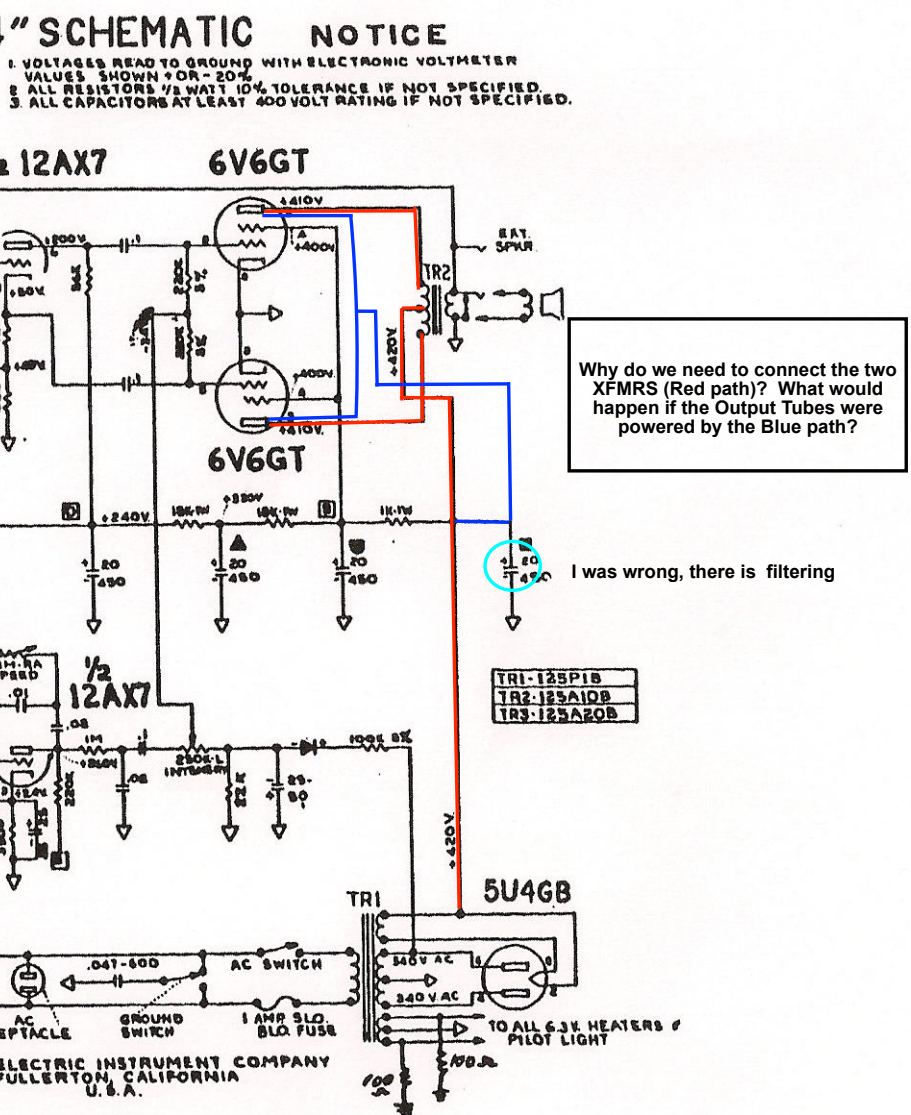

Why do we need to connect the two XFMRS (Red path)? What would happen if the Output Tubes were powered by the Blue path?

I was wrong, there is filtering