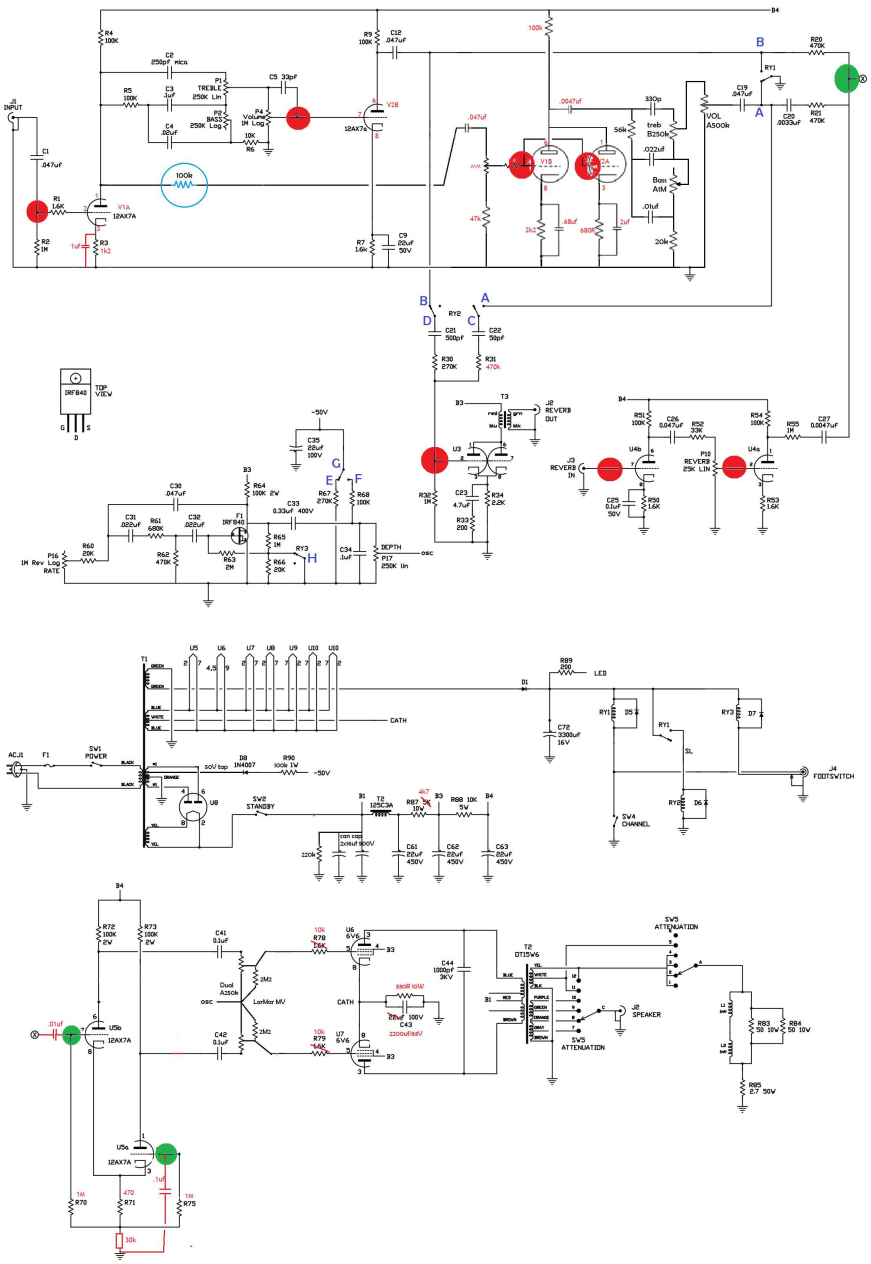Rockin'Bird Reverb feb 22 PREAMP