Double click to edit text

Princeton Clone with Vactrol Tremolo
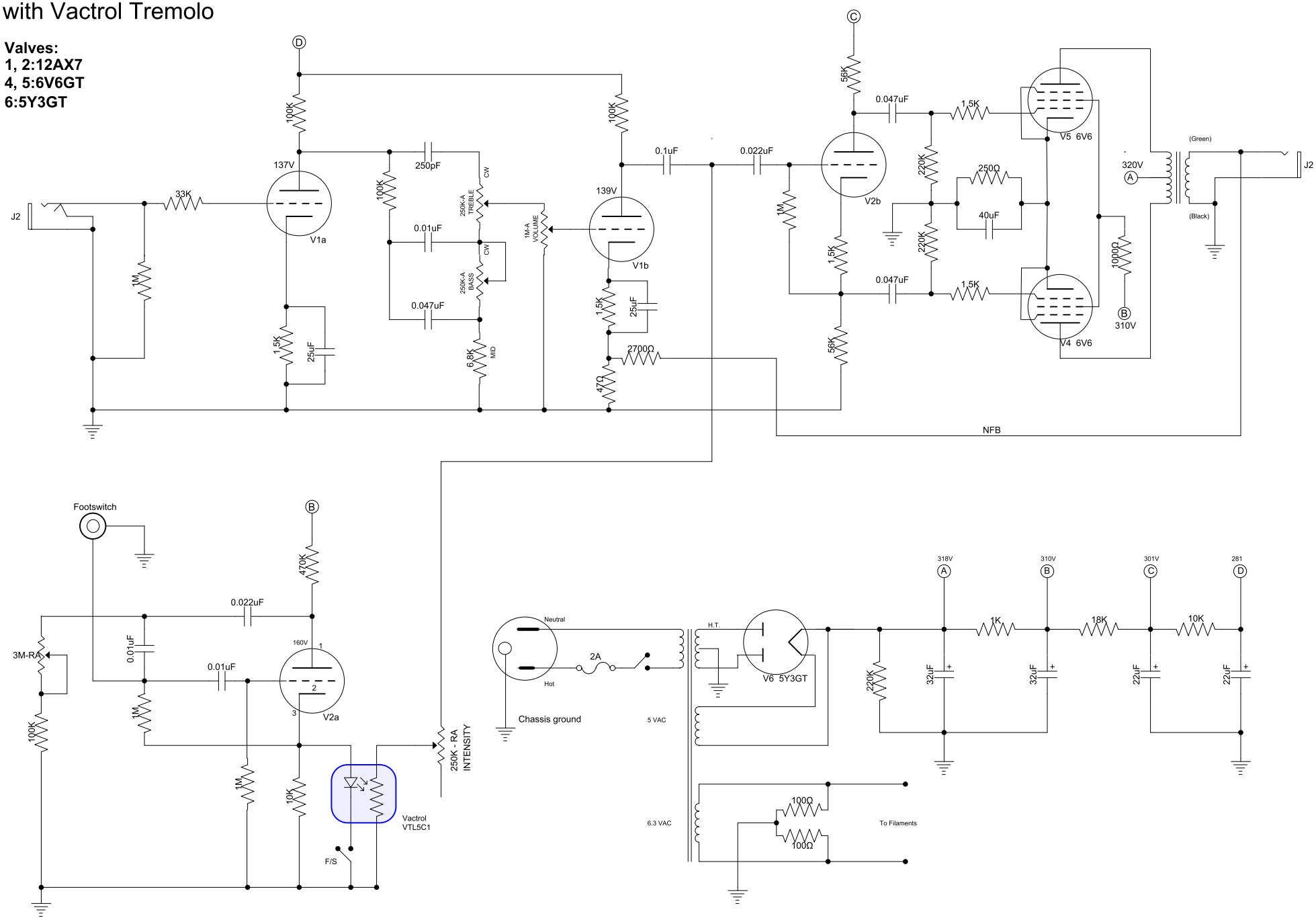
Valves:
1, 2:12AX7
4, 5:6V6GT
6:5Y3GT