Double click to edit text

# Princeton Clone
# with Vactrol Tremolo
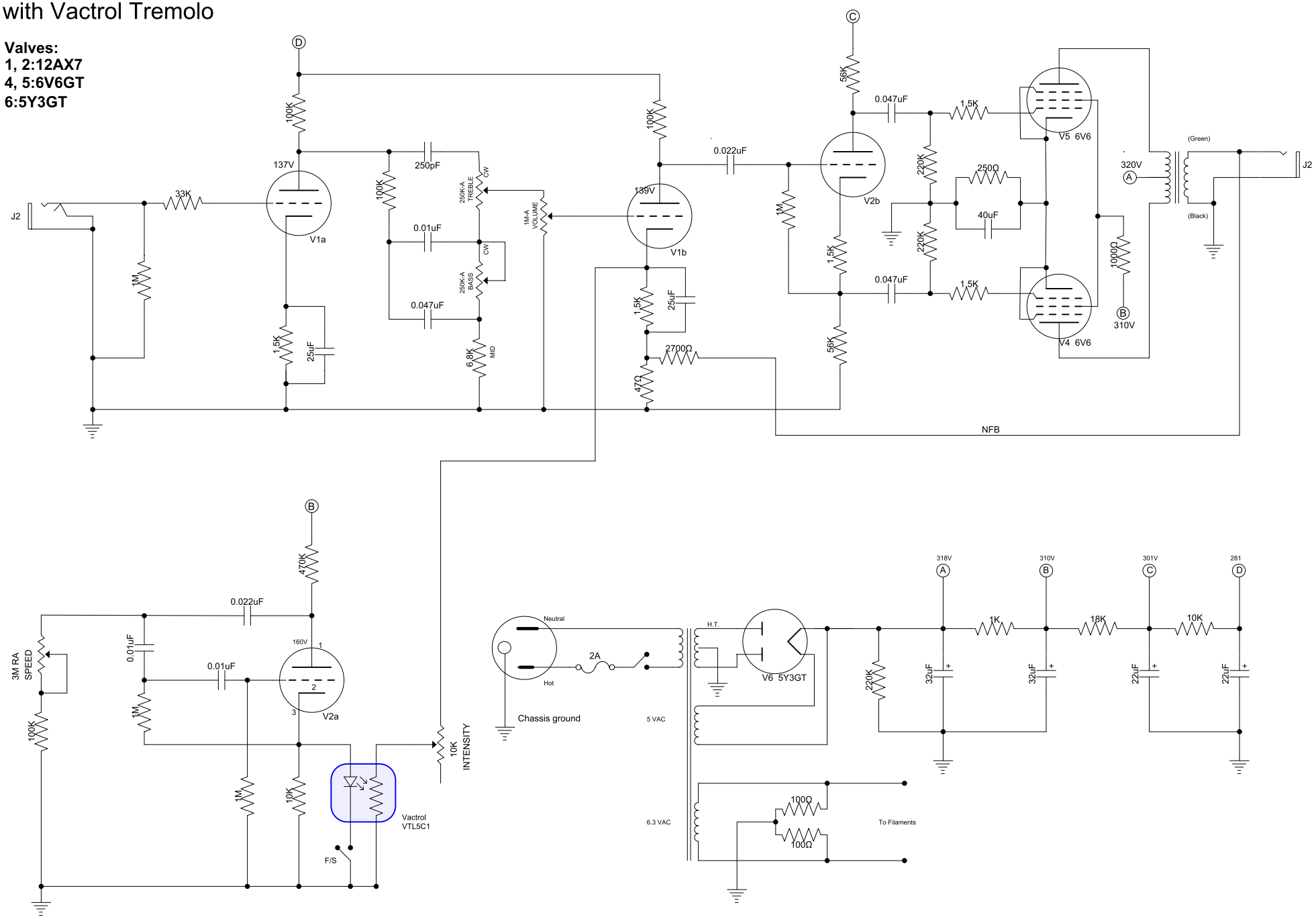
**Valves:**
**1, 2:12AX7**
**4, 5:6V6GT**
**6:5Y3GT**