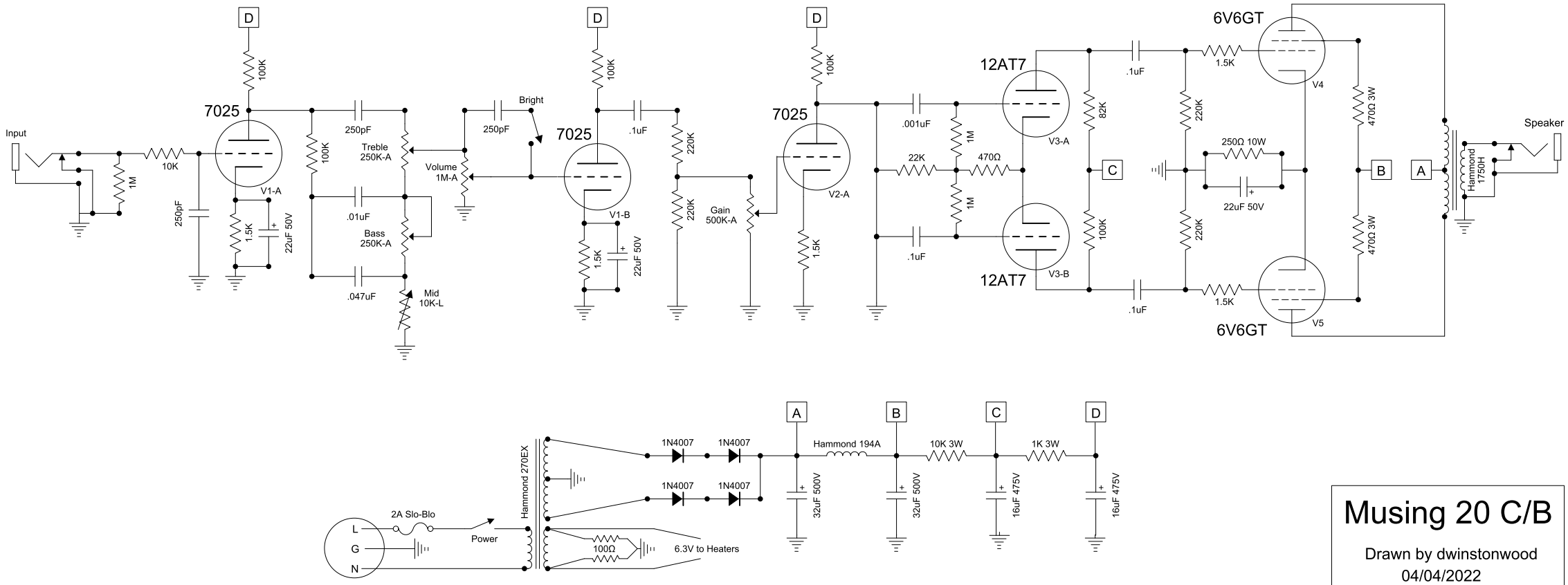

Musing 20 C/B

Drawn by dwinstonwood
04/04/2022