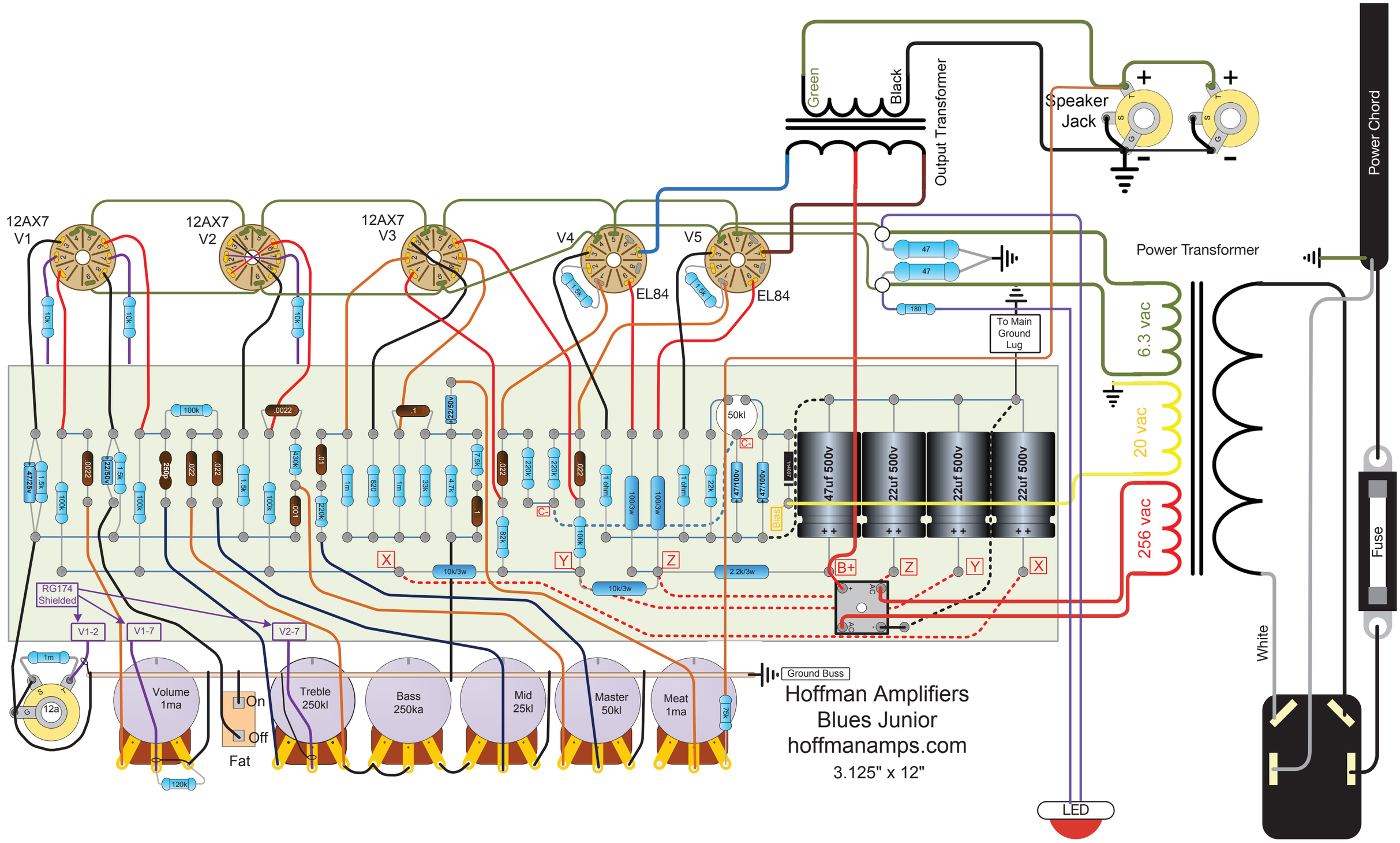
12AX7
V1
12AX7
V2
12AX7
V3
V4
V5
EL84
EL84
Green
Black
Output Transformer
Speaker
Jack
Power Chord
Power Transformer
6.3 vac
20 vac
256 vac
To Main
Ground
Lug
47uf 500v
22uf 500v
22uf 500v
22uf 500v
B+
Z
Y
X
Bias
C-
50kl
RG174
Shielded
V1-2
V1-7
V2-7
Volume
1ma
On
Off
Fat
Treble
250kl
Bass
250ka
Mid
25kl
Master
50kl
Meat
1ma
Ground Buss
Hoffman Amplifiers
Blues Junior
hoffmanamps.com
3.125" x 12"
LED
White
Fuse