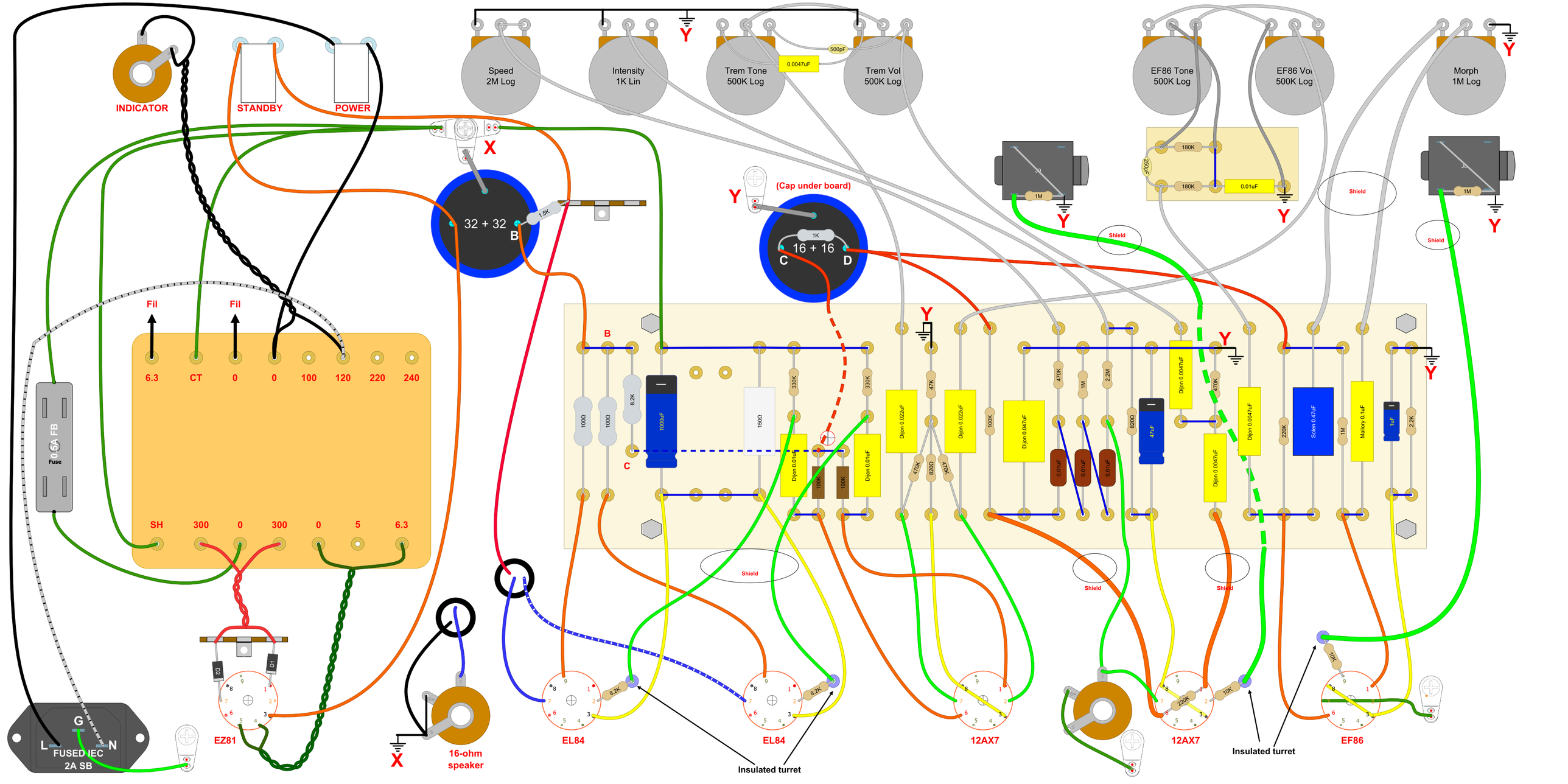
INDICATOR
STANDBY
POWER
Speed
2M Log
Intensity
1K Lin
Trem Tone
500K Log
0.0047uF
500pF
Trem Vol
500K Log
EF86 Tone
500K Log
EF86 Vol
500K Log
Morph
1M Log
Y
X
32 + 32
B
1.5K
(Cap under board)
1K
16 + 16
C
D
J2
1M
180K
180K
250pF
0.01uF
Shield
Fil
Fil
6.3
CT
0
0
100
120
220
240
SH
300
0
300
0
5
6.3
0.5A FB
Fuse
100Ω
100Ω
8.2K
1000uF
150Ω
330K
330K
Dijon 0.01uF
100K
100K
Dijon 0.01uF
Dijon 0.022uF
47K
470K
820Ω
10K
Dijon 0.022uF
100K
Dijon 0.047uF
470K
1M
2.2M
0.01uF
0.01uF
0.01uF
820Ω
47uF
Dijon 0.0047uF
470K
Dijon 0.0047uF
Dijon 0.0047uF
220K
Solen 0.47uF
1M
Mallory 0.1uF
1uF
2.2K
D2
D1
EZ81
G
L
N
FUSED IEC
2A SB
16-ohm
speaker
EL84
EL84
8.2K
8.2K
Insulated turret
12AX7
12AX7
220K
10K
10K
Insulated turret
EF86