RR763-EF80 BLACKVIBE MICRO EF80

2 Watt No Reverb No Tremolo Single Channel AB763 Vibroverb

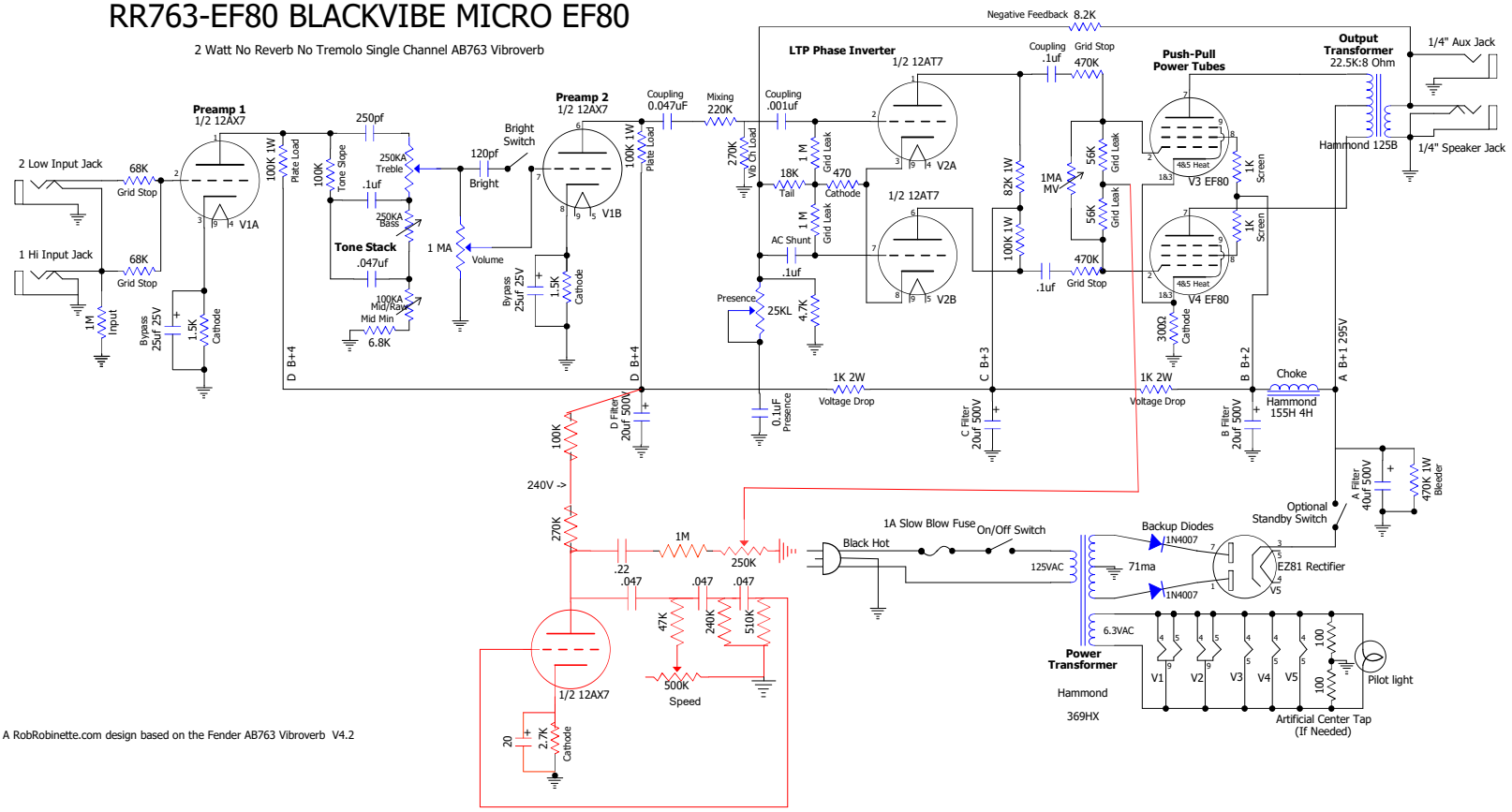

A RobRobinette.com design based on the Fender AB763 Vibroverb V4.2

Note: image has been scaled down to fit the page.