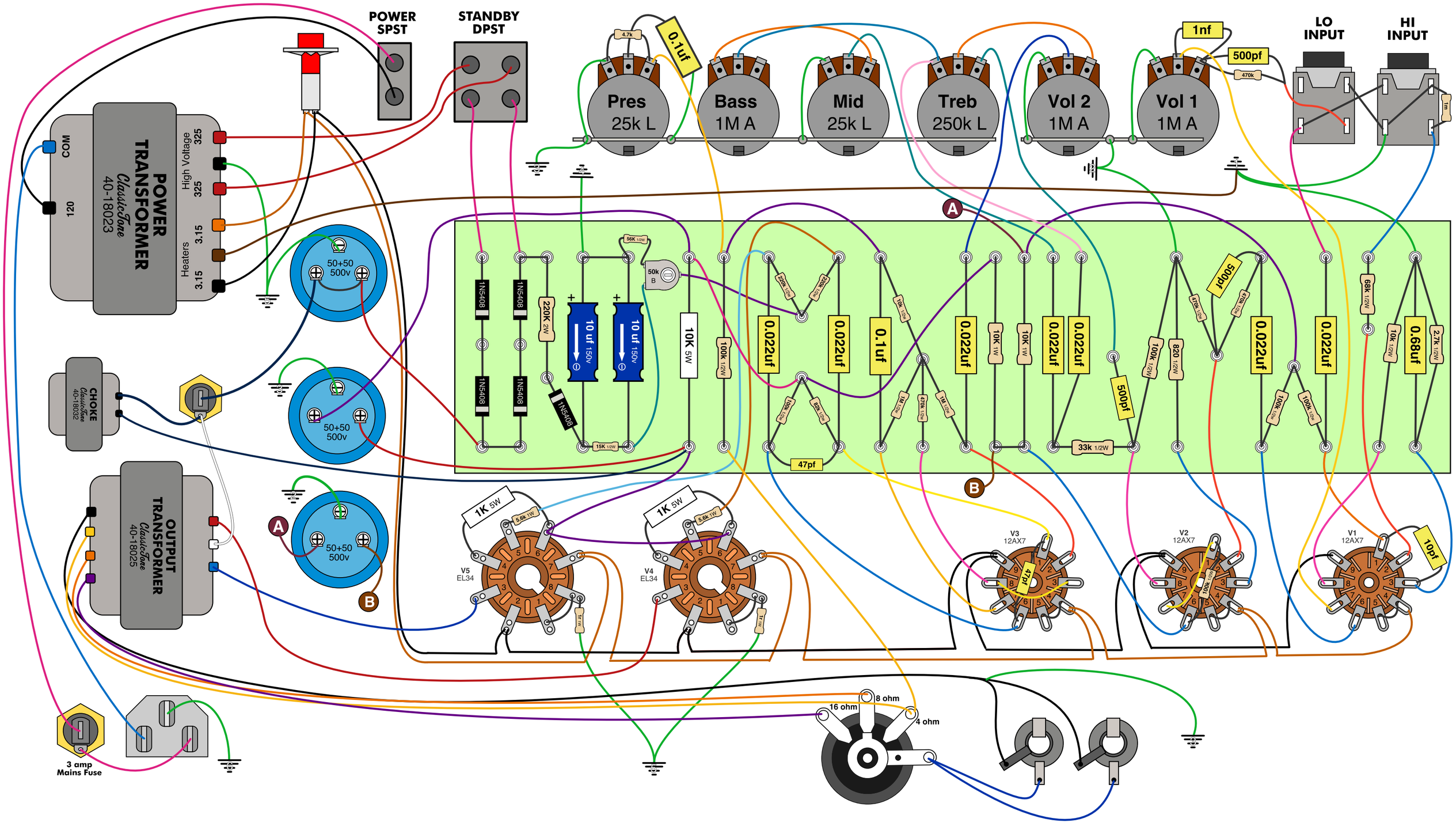
POWER SPST
STANDBY DPST
LO INPUT
HI INPUT
Pres 25k L
Bass 1M A
Mid 25k L
Treb 250k L
Vol 2 1M A
Vol 1 1M A
4.7k
0.1uf
1nf
500pf
470k
POWER TRANSFORMER ClassicTone 40-18023
COM
120
High Voltage
325
325
Heaters
3.15
3.15
CHOKE ClassicTone 40-18032
OUTPUT TRANSFORMER ClassicTone 40-18025
50+50 500v
50+50 500v
50+50 500v
1N5408
1N5408
1N5408
1N5408
220K 2W
10 uf 150v
10 uf 150v
56K 1/2W
50k B
15K 1/2W
10K 5W
100k 1/2W
0.022uf
0.022uf
0.1uf
0.022uf
10K 1W
10K 1W
0.022uf
0.022uf
500pf
100k 1/2W
820 1/2W
470k 1/2W
270k 1/2W
0.022uf
100k 1/2W
100k 1/2W
0.022uf
68K 1/2W
10K 1/2W
0.68uf
2.7K 1/2W
47pf
33k 1/2W
1K 5W
5.6k 1W
V5 EL34
1K 5W
5.6k 1W
V4 EL34
1K 5W
V3 12AX7
4pf
V2 12AX7
100k 1/2W
V1 12AX7
10pf
A
B
A
B
3 amp Mains Fuse
16 ohm
8 ohm
4 ohm