Deluxe Reverb AB763 - One Channel No Tremolo

Tubes:
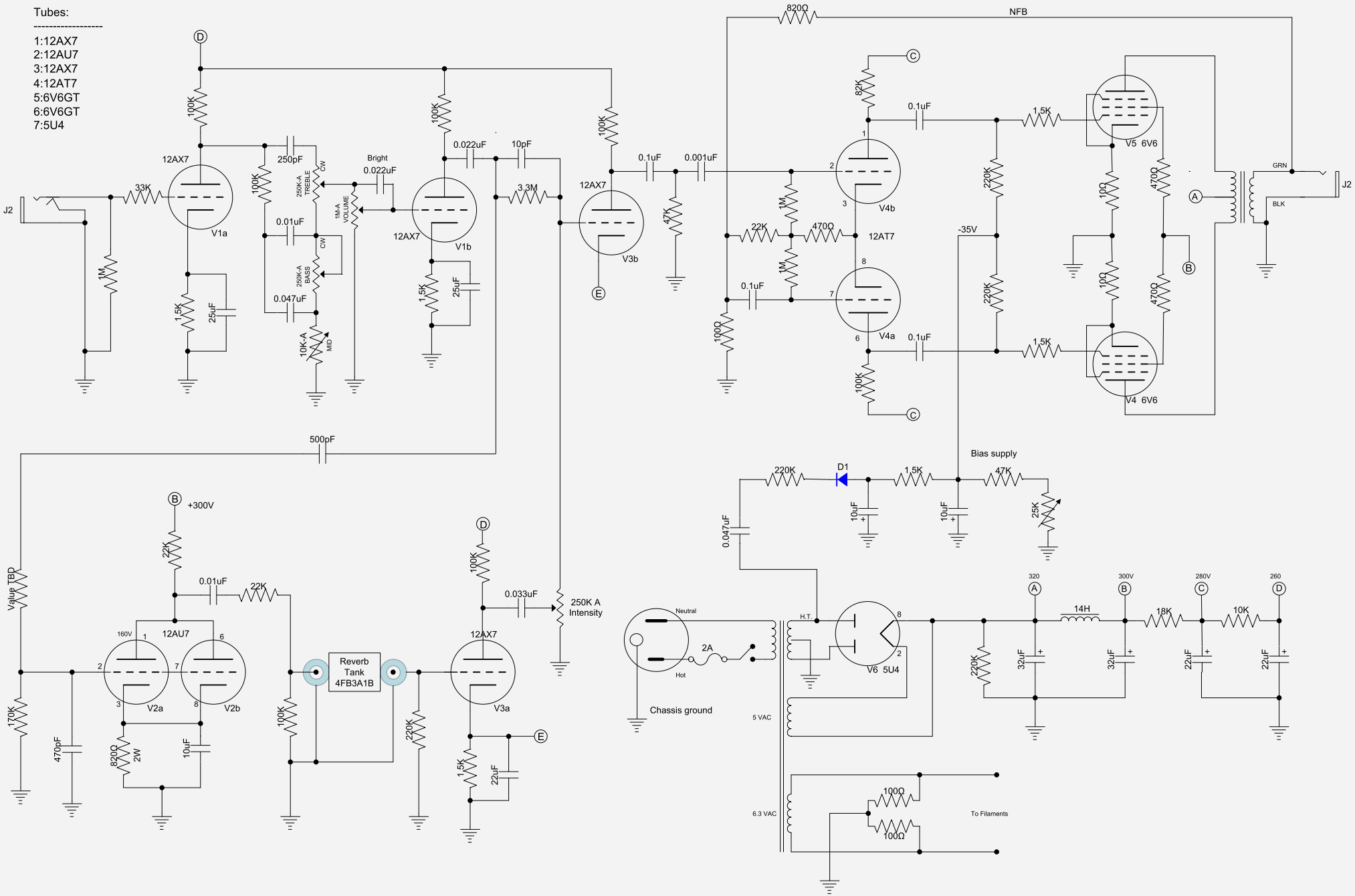
1:12AX7
2:12AU7
3:12AX7
4:12AT7
5:6V6GT
6:6V6GT
7:5U4