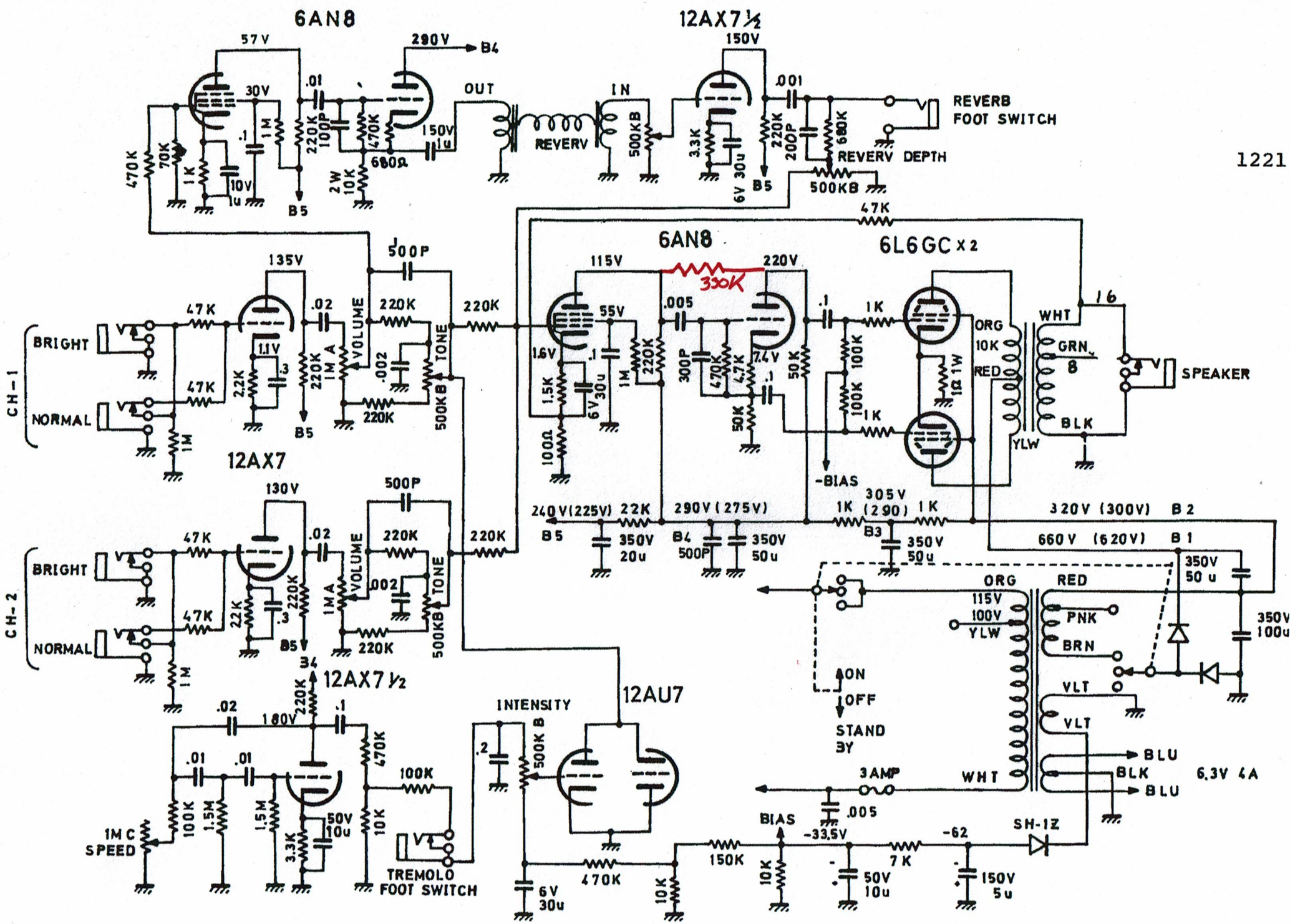
6AN8
12AX7½
6AN8
6L6GC x2
12AX7
12AX7½
12AU7
CH-1
CH-2
BRIGHT
NORMAL
VOLUME
TONE
OUT
IN
REVERV
REVERB FOOT SWITCH
REVERV DEPTH
SPEAKER
-BIAS
ON
OFF
STAND BY
INTENSITY
TREMOLO FOOT SWITCH
SPEED
BIAS
SH-1Z
6.3V 4A
1221