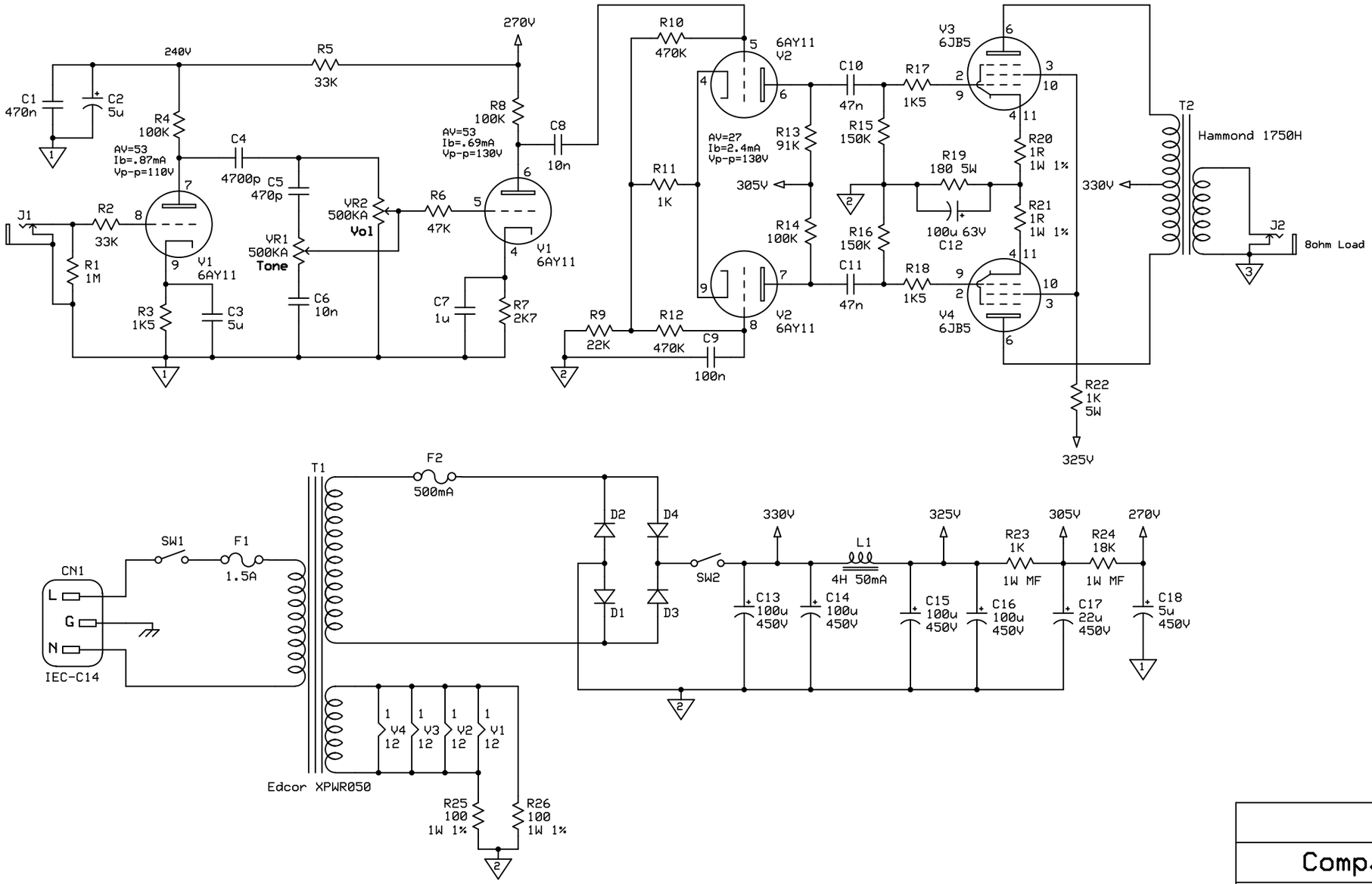

S.T.A.C.

Compactronator Mk TVT

H.B. Mitcheltree	Rev 1.0 1/14/2010	Page 1 of 1