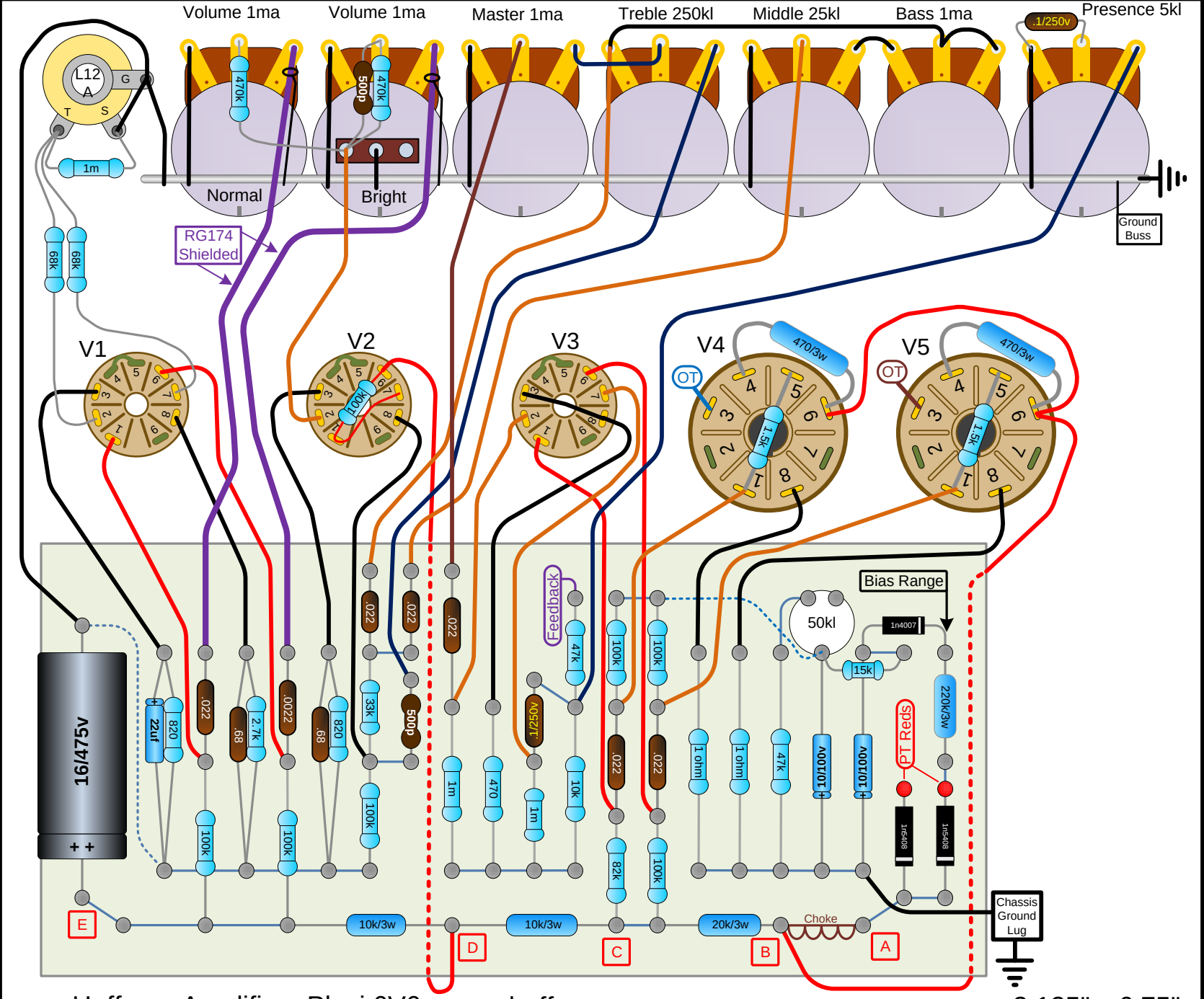

Hoffman Amplifiers Plexi 6V6 hoffmanamps.com 3.125" x 6.75"

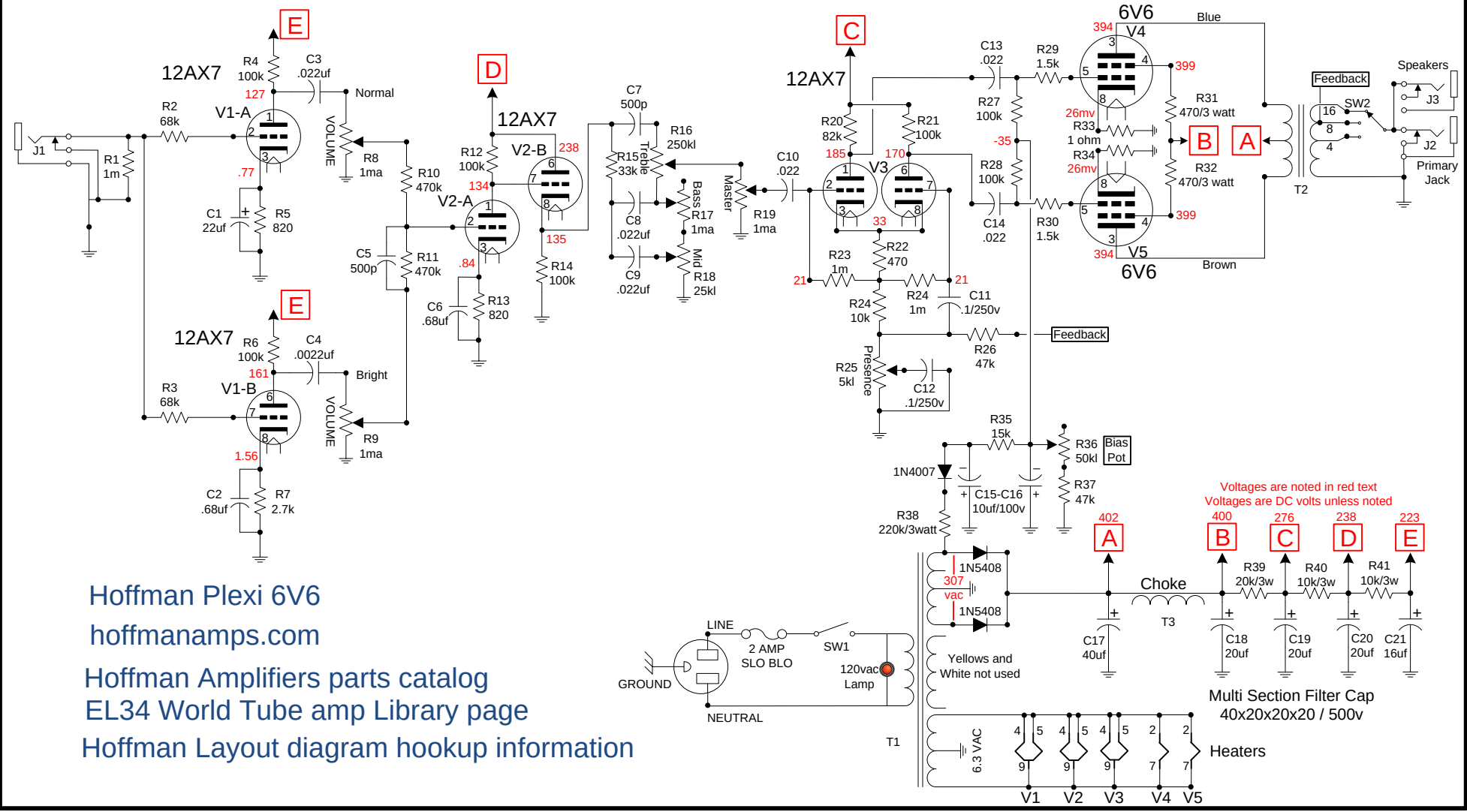
Hoffman Plexi 6V6
hoffmanamps.com
Hoffman Amplifiers parts catalog
EL34 World Tube amp Library page
Hoffman Layout diagram hookup information
12AX7
V1-A
V1-B
V2-A
V2-B
V3
V4
V5
6V6
R1 1m
R2 68k
R3 68k
R4 100k
R5 820
R6 100k
R7 2.7k
R8 1ma
R9 1ma
R10 470k
R11 470k
R12 100k
R13 820
R14 100k
R15 33k
R16 250kl
R17 1ma
R18 25kl
R19 1ma
R20 82k
R21 100k
R22 470
R23 1m
R24 10k
R24 1m
R25 5kl
R26 47k
R27 100k
R28 100k
R29 1.5k
R30 1.5k
R31 470/3 watt
R32 470/3 watt
R33 1 ohm
R34
R35 15k
R36 50kl
R37 47k
R38 220k/3watt
R39 20k/3w
R40 10k/3w
R41 10k/3w
C1 22uf
C2 .68uf
C3 .022uf
C4 .0022uf
C5 500p
C6 .68uf
C7 500p
C8 .022uf
C9 .022uf
C10 .022
C11 .1/250v
C12 .1/250v
C13 .022
C14 .022
C15-C16 10uf/100v
C17 40uf
C18 20uf
C19 20uf
C20 20uf
C21 16uf
Normal
Bright
VOLUME
Treble
Bass
Mid
Master
Presence
Bias Pot
Feedback
Speakers
Primary Jack
SW2
J1
J2
J3
T1
T2
T3
1N4007
1N5408
1N5408
Choke
Yellows and White not used
6.3 VAC
Heaters
LINE
GROUND
NEUTRAL
2 AMP SLO BLO
SW1
120vac Lamp
Blue
Brown
Voltages are noted in red text
Voltages are DC volts unless noted
Multi Section Filter Cap
40x20x20x20 / 500v
127
.77
161
1.56
134
.84
135
185
170
33
21
21
394
399
26mv
-35
402
400
276
238
223
307 vac

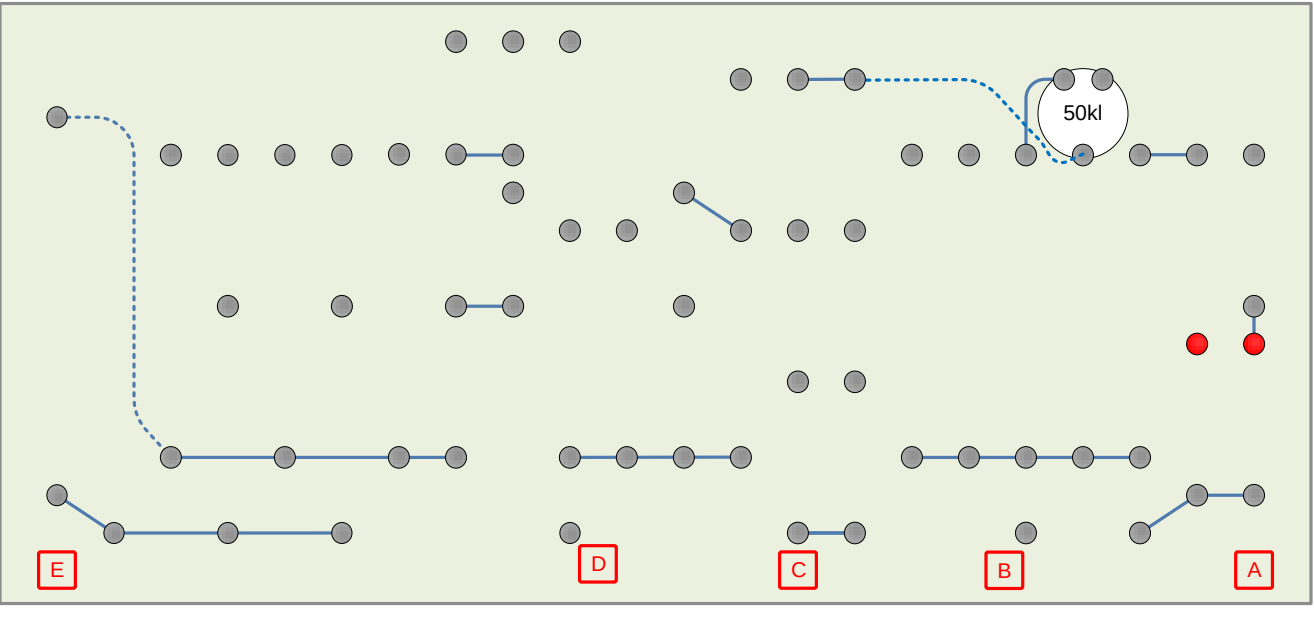

Hoffman Amplifiers Plexi 6V6 hoffmanamps.com

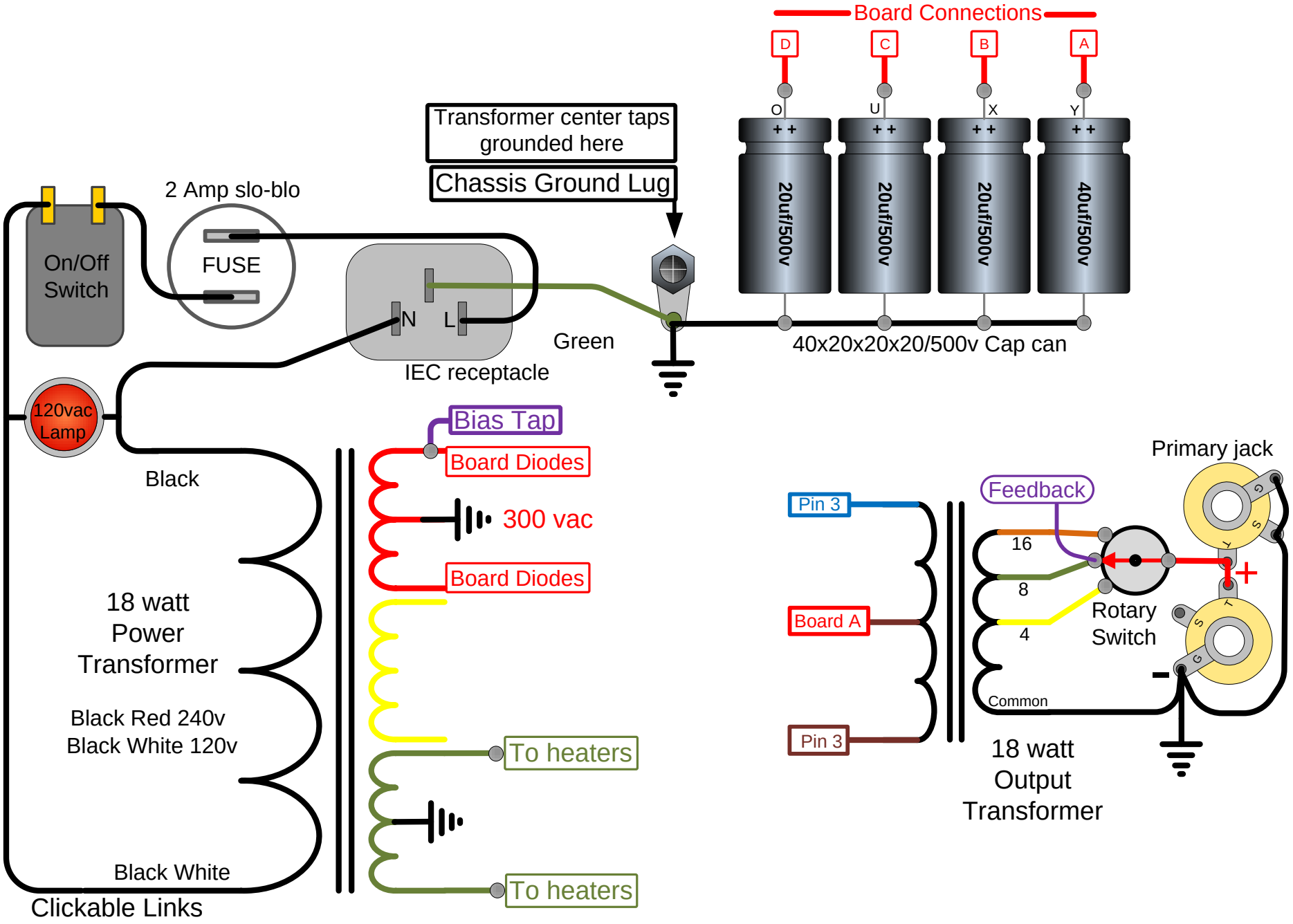

Hoffman Amplifiers parts catalog

EL34 World Tube amp Library page

Hoffman Layout diagram hookup information

Hoffman Plexi 6V6

hoffmanamps.com