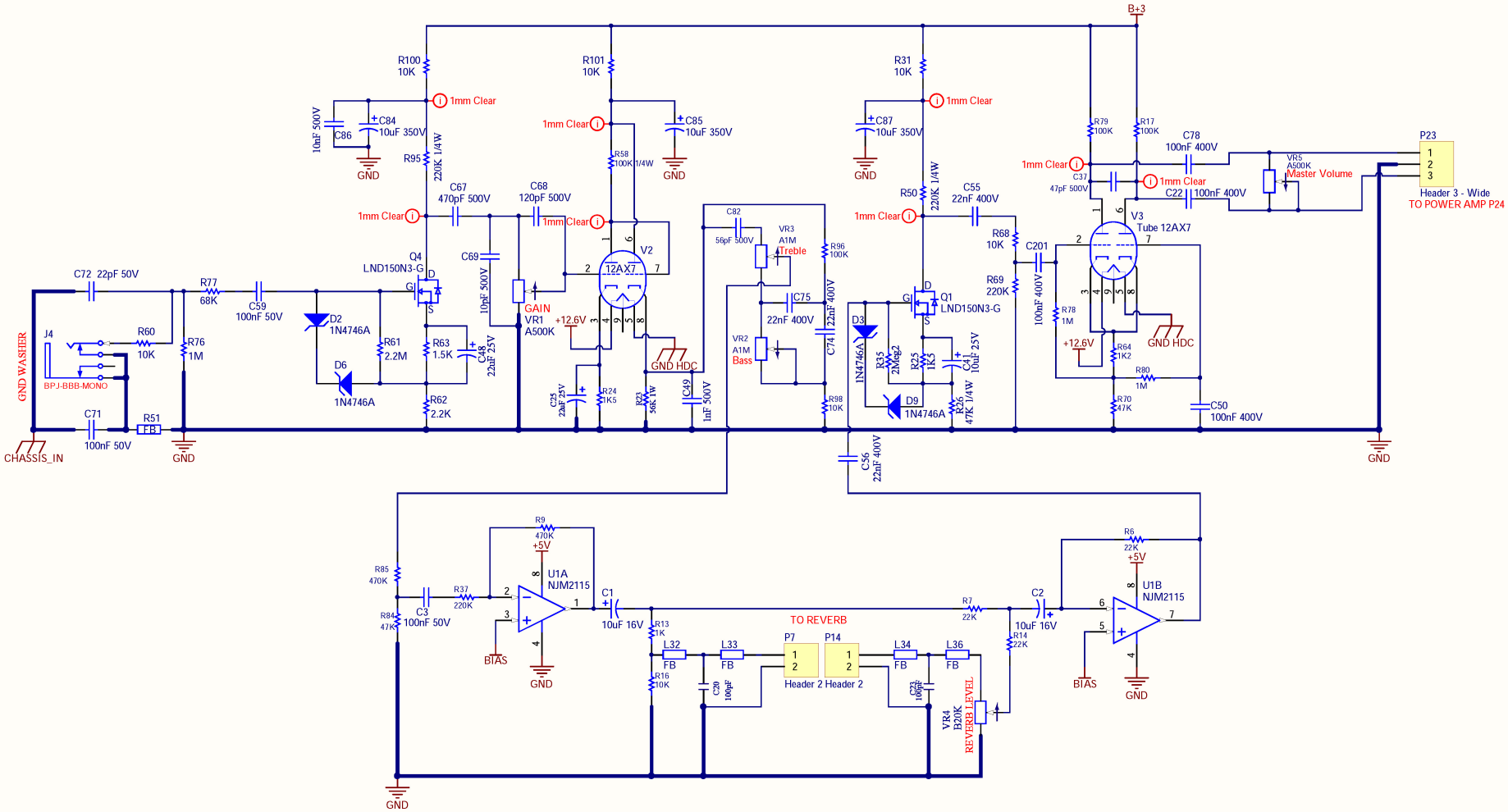

Drawing Number: VD-A30013	Designed By: P Scarffe	Checked By: D. Clarke	Date: 09/06/2015
CHANGE HISTORY			

Issue	Date	Change	Signed

VOX Amplification ltd.
1 Harrison Close
Knowlhill
Milton Keynes
Bucks, MK5 8PA

Title: AC10C1 Main Schematics

Revision: PR2

Sheet 1 of 2

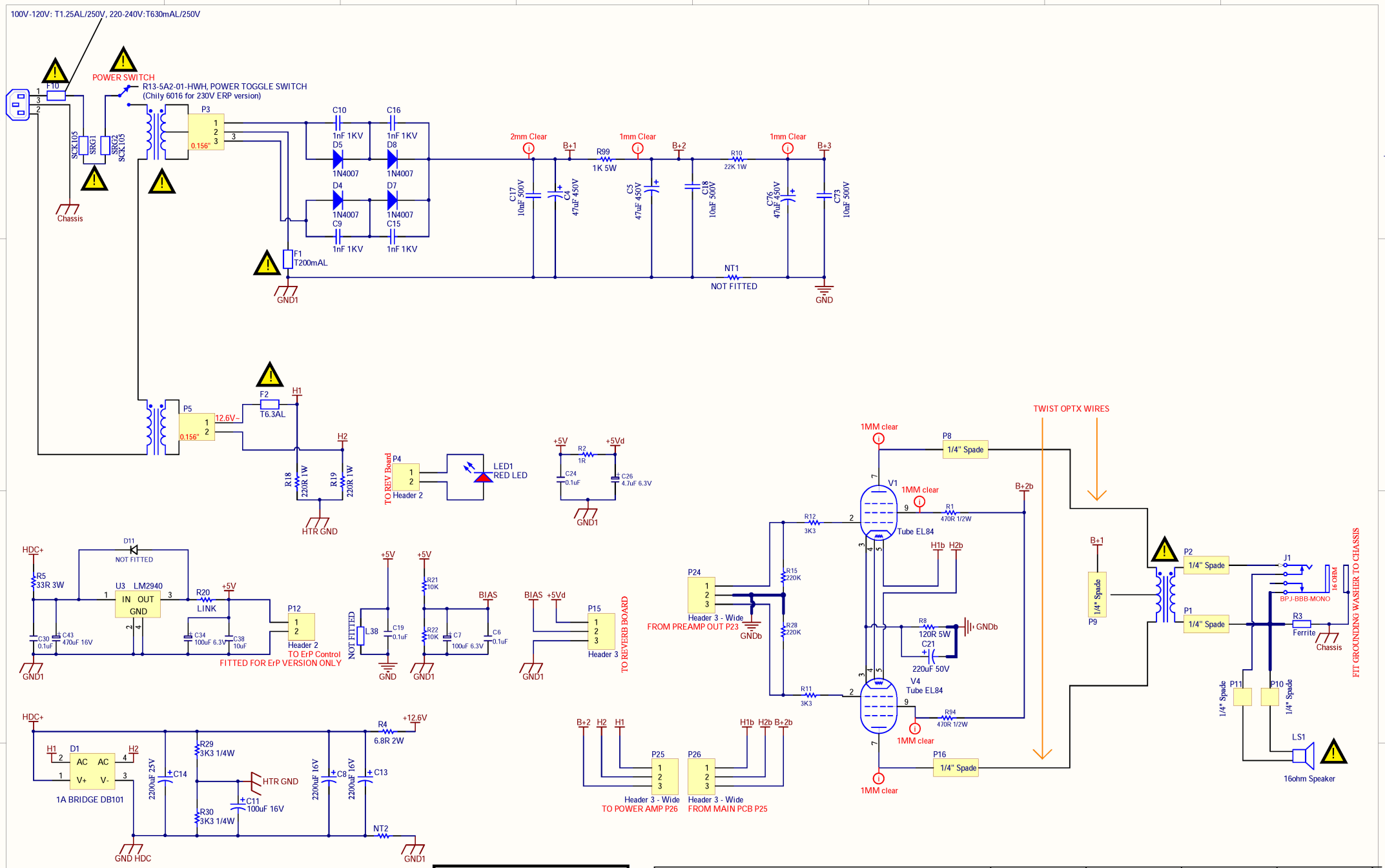

SAFETY CRITICAL COMPONENT
REPLACE ONLY WITH THE SAME
TYPE & RATING
IF IN DOUBT CONTACT SUPPLIER

Drawing Number: VD-A30013	Designed By: P Scarffe	Checked By: *	Date: 09/06/2015
CHANGE HISTORY			

Issue	Date	Change	Signed

VOX Amplification ltd.
1 Harrison Close
Knowlhill
Milton Keynes
Bucks, MK5 8PA

Title: AC10C1 Main Schematics

Revision: PR2

Sheet 2 of 2